COASTIPC
coastipc.com | 866-412-6278 | info@coastipc.com

MIC-770 V3

Compact Fanless System with 12th/13th/14th Gen Intel® Core™ i CPU Socket (LGA 1700)

Features

- Intel® 12th/13th/14th Gen Core™ i CPU socket-type (LGA1700) with Intel® R680E/H610E chipset
- Wide operating temperature (-20 ~ 60 °C)
- VGA and HDMI output
- 2 x GigaLAN, 2 x USB 3.2 (Gen2) and 6 x USB 3.2 (Gen1)
- 2 x RS-232/422/485 and 4 x RS232 serial ports (Optional)
- 1 x 2.5" HDD/SSD, 1 x mSATA, and 1 x NVMe M.2
- 9 ~ 36 V_{DC} input power range
- IP40 dust proof for deployment in harsh environment
- Supports FlexIO and iDoor technology, flexible configure additional HDMI, DP, DVI, COM port, DIO, Remote switch IO
- Supports Advantech i-Modules
- Supports Advantech SUSIAPI and embedded software APIs
- Supports Intel® vPro™/AMT and TPM technologies
- Supports Advantech iBMC 1.2 remote out-of-band power management solution on DeviceOn

Specifications

Intel® Core™ Processors Series 2 (Bartlett Lake-S)	CPU	251E	251TE	221E	221TE	211E	211TE	211EF	201E	201TE	300	300T		
	P-core Base Frequency	2.1 GHz	1.4 GHz	2.7 GHz	1.8 GHz	2.7 GHz	1.7 GHz	2.7 GHz	3.6 GHz	2.9 GHz	3.9 GHz	3.4 GHz		
	L3 Cache	36 MB	36 MB	24 MB	24 MB	20 MB	20 MB	20 MB	12 MB	12 MB	6 MB	6 MB		
	Cores	24	24	14	14	10	10	10	4	4	2	2		
	Processor Base Power	65W	45W	65W	45W	65W	45W	65W	60W	45W	46W	35W		
	Chipset	R680E/H610E												
	BIOS	AMI 256Mb SPI Flash												
14th Generation Processors	CPU	i9-14900	i7-14700	i5-14500	i5-14400	i5-14400F	i3-14100	300	i9-14900T	I7-14700T	i5-14500T	i5-14400T	i3-14100T	300T
	P-core Base Frequency	2.0 GHz	2.1 GHz	2.6 GHz	2.5 GHz	2.5 GHz	3.5 GHz	3.9 GHz	1.1 GHz	1.3GHz	1.7 GHz	1.5 GHz	2.7 GHz	3.4 GHz
	L3 Cache	36 MB	33 MB	24 MB	20 MB	20 MB	12 MB	6 MB	36 MB	33 MB	24 MB	20 MB	12 MB	6 MB
	Cores	24	20	14	10	10	4	2	24	20	14	10	4	2
	Processor Base Power	65 W	65 W	65 W	65 W	65 W	60 W	46 W	35 W	35 W	35 W	35 W	35 W	35 W
	Chipset	R680E/H610E												
	BIOS	AMI 256Mb SPI Flash												
13th Generation Processors	CPU	i9-13900(E)	i7-13700(E)	i5-13500(E)	i5-13400(E)	i3-13100(E)	i9-13900TE	i7-13700T(E)	i5-13500T(E)	i3-13100T(E)				
	P-core Base Frequency	2.0 GHz	2.10 GHz	2.50 GHz	2.50 GHz	3.40 GHz	1.00 GHz	1.40 GHz	1.60 GHz	2.50 GHz				
	L3 Caches	36 MB	30 MB	24 MB	20 MB	12 MB	36 MB	30 MB	24 MB	12 MB				
	Cores	24	16	14	10	4	24	16	14	4				
	Processor Base Power	65W	65W	65W	65W	60W	35W	35W	35W	35W				
	Chipset	R680E/H610E												
	BIOS	AMI 256Mb SPI Flash												
12th Generation Processor	CPU	i9-12900(E)	i7-12700(E)	i5-12500(E)	i3-12100(E)	G7400E	G6900E	i9-12900TE	i7-12700TE	i5-12500TE	i3-12100TE	Pentium G7400TE	Celeron G6900TE	
	Core/Thread number	16/24	12/20	6/12	4/8	2/4	2/2	16/24	12/20	6/12	4/8	2/4	2/2	
	Base Frequency	2.30 GHz	2.10 GHz	2.90 GHz	3.20 GHz	3.60 GHz	3.00 GHz	1.10 GHz	1.40 GHz	1.90 GHz	2.10 GHz	3.00 GHz	2.4 GHz	
	Max Turbo Frequency	5.00 GHz	4.80 GHz	4.50 GHz	4.20 GHz			4.80 GHz	4.60 GHz	4.30 GHz	4.00 GHz			
	L3 Cache	30 MB	25 MB	18 MB	5 MB	2.5 MB	2.5 MB	30 MB	16 MB	12 MB	6 MB	2.5MB	2.5MB	
	Processor Base Power	65W	65W	65W	65W	46W	46W	35W	35W	35W	35W	35W	35W	
	Chipset	R680E/H610E												
	BIOS	AMI 256Mb SPI Flash												
Memory	Technology	Dual-channel DDR5 4800 MHz (R680E SKU supports ECC)												
	Socket	2 x 262-pin DDR5 SODIMM (up to 64GB per socket)												
	Maximum Capacity	128GB												
Display	Chipset	Core i: Intel® UHD Graphics 770 Pentium/Celeron: Intel® HD Graphics 710												
	VGA	1 x DB15, up to 1920 x 1200 maximum resolution												
	HDMI	1 x HDMI, up to 4096 x 2160@30Hz												
	Multiple Display	R680E: 4 x independent displays (third and fourth display output via optional cable) H610E: 3 x independent displays (third display output via optional cable)												
Ethernet	Controller	R680E LAN1: Intel® I219LM, LAN2: Intel® i210IT H610E LAN1: Intel® I219V, LAN2: Intel® i210IT												
	Interface	2 x RJ45												

Note 1: The CPU PCIe slot can support graphic cards only due to Intel design specification. Other types of add-on cards will have no function installed on this slot.
Note 2: For the 65W CPU, the operating temperature could support up to 50 degrees and may cause thermal throttling when continued system full-loading which could adjust the CPU power config from BIOS to increase the operating temperature.

All product specifications are subject to change without notice.

Specifications (Cont.)

Storage	HDD	1 x 2.5" HDD/SSD (up to 2 x 2.5" SSD by optional kit; 2 x 3.5" HDD by i-Module)		
	mSATA	1		
	NVMe M.2	1 x M Key 2280 with PCIe Gen 4 x 4 (R680E SKU, operating temp. -20 ~ 50 °C)		
	RAID	0/1/5/10 (R680E SKU only)		
I/O	USB	R680E: 2 x USB3.2 (Gen2), 6 x USB3.2 (Gen1), 1 x USB 2.0 (Internal) H610E: 4 x USB3.2 (Gen1), 4 x USB2.0		
	Serial Port	2 x DB9, RS-232/422/485 support auto flow control; 4 x RS-232 (Optional)		
	Audio	2 (1 x line out and 1 x mic in)		
Expansion	PCIe slot	Supports Advantech MIC-75 series i-module, please refer Optional i-Modules		
	Mini PCIe/mSATA	R680E: 1 x mini PCIe, 1 x mini PCIe/mSATA H610E: 1 x mini PCIe, 1 x mSATA		
LED and Switch	LED	2 (1 x Storage and 1 x Power), 4 for COM1 TX/RX and COM2 TX/RX		
	Button	1 x Power on/off switch		
	Remote Switch	Yes, 2pin terminal block (Optional)		
Power	Type	ATX/AT		
	Input Voltage	9 ~ 36 V_{DC}		
	Power consumption	Typical: 45.7W Maximun: 108W		
Watchdog Timer	Output	System reset		
	Interval	Programmable 1 ~ 255 sec/min		
Environment	Temperature	65W CPU w/ industrial wide Temp. SSD	35W CPU w/ industrial wide Temp. SSD	Non-operating
		Standard: -20 ~ 50°C with 0.7 m/s air flow	Standard: -20 ~ 60°C with 0.7 m/s air flow	-40 ~ 85°C
		Extreme: -20 ~ 65°C with 0.7 m/s air flow	Extreme: -20 ~ 70°C with 0.7 m/s air flow	-40 ~ 85°C
		Extreme: -20 ~ 35°C without air flow	Extreme: -20 ~ 50°C without air flow	-40 ~ 85°C
		Fan kit: -20 ~ 55°C without air flow		-40 ~ 85°C
	Humidity	95% @ 40 °C (non-condensing)		
	Vibration	With SSD: 3 Grms @ 5 ~ 500 Hz, random, 1 hr/axis With 2.5" HDD: 1 Grms @ 5 ~ 500 Hz, random, 1 hr/axis		2G
	Shock	With SSD: 20G, IEC-68-2-27, half-sine wave, 11 ms duration		50G 11 ms
Mechanical	Dimensions (W x H x D)	Standard: 77 x 192 x 230 mm (3.07" x 7.55" x 9.05")	Extreme: 107.3 x 192 x 230 mm (4.22" x 7.55" x 9.05")	FAN Kit: 120 x 200 x 230mm (4.73" x 7.87" x 9.05")
	Weight	Standard: 2.8 kg (6.17 lbs)	Extreme: 4.5 kg (9.92 lbs)	FAN Kit: 4.4kg (9.48 lbs)
	Installation	Desktop/wall mount		
Certifications	EMC	CE/FCC Class A, CCC, BSMI		
	Safety	CB/UL, CCC, BSMI		
OS Support		Windows 11, Windows 10, Windows 10 IoT, Linux OS		

Front View

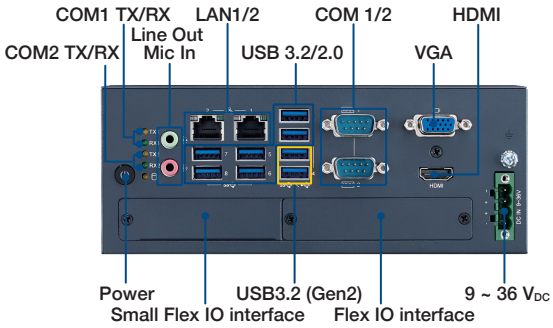

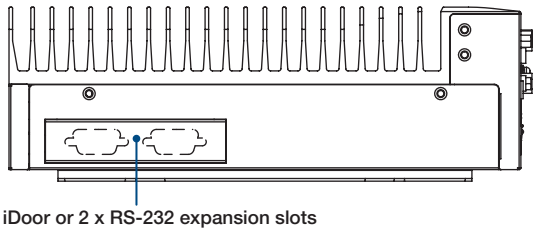

Dimensions

Unit: mm

Standard (MIC-770V3x-00A1)

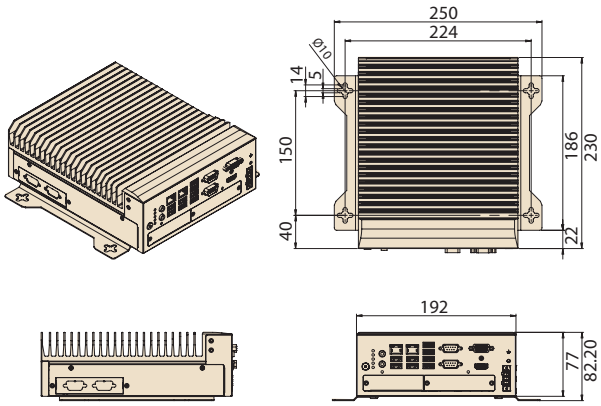

Extreme (MIC-770V3x-E0A1)

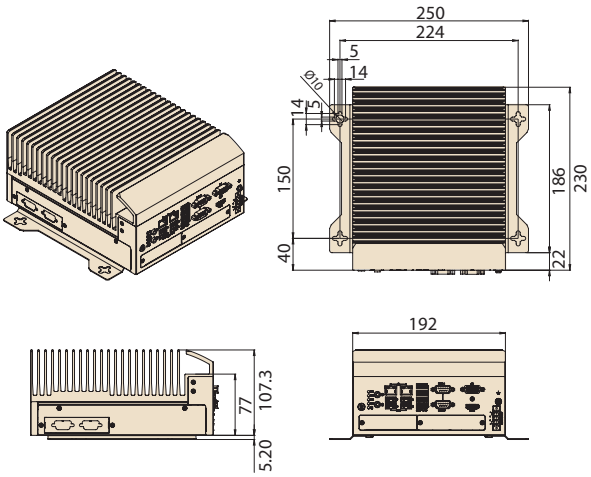

Fan Kit (MIC-770V3x + 98R17501303)*

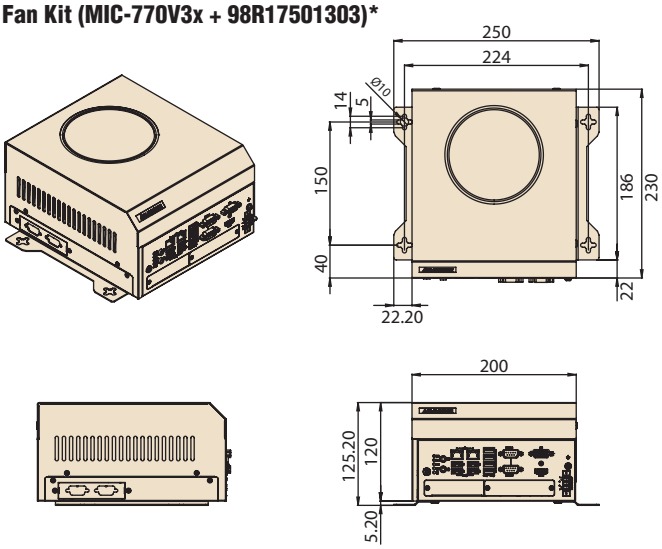

Note 1: Extreme SKU can be equipped with i-Module.

Note 2: 98R17501303 fan kit can only be equipped with the MIC-770V3 standard SKU; Extreme and i-Module are not supported.

Ordering Information

Part Number	SKU	COO	VGA	HDMI	2.5" HDD/SSD	mSATA	NVMe M.2	USB3.2 (Gen2)	USB3.2 (Gen1)	USB 2.0	Ethernet	COM	PCIe	Power
MIC-770V3W-00A1	Standard	China	1	1	1	1	1	2	6	0	2	2, up to 6 (Optional)	i-Module (optional)*	9 ~ 36V_{DC}
MIC-770V3W-00A2U	Standard	Taiwan	1	1	1	1	1	2	6	0	2	2, up to 6 (Optional)	i-Module (optional)*	9 ~ 36V_{DC}
MIC-770V3W-E0A1	Extreme	China	1	1	1	1	1	2	6	0	2	2, up to 6 (Optional)	i-Module (optional)*	9 ~ 36V_{DC}
MIC-770V3H-00A1	Standard	China	1	1	1	1	0	0	4	4	2	2, up to 6 (Optional)	i-Module (optional)*	9 ~ 36V_{DC}
MIC-770V3H-E0A1	Extreme	China	1	1	1	1	0	0	4	4	2	2, up to 6 (Optional)	i-Module (optional)*	9 ~ 36V_{DC}

* MIC-770V3H does not support MIC-75M20-01 and MIC-75G30
** Please use the wide-temperature NVMe module without the heatsink.

Packing List

Part Number	Description	Quantity
MIC-770 V3	MIC-770 V3 bare system	1
2041077050	MIC-770 V3 startup manual (ENG+TC+SC)	1
1652003234	4-pin Phoenix power connector	1
1960070543T00A	2 x Mounting bracket	2
1700013095-01	SATA cable	1
1700024372-01	SATA power cable	1
2170000093-01	CPU thermal grease	1
1990019498N000	RAM thermal pad	2

Optional i-Modules*

Part Number	Description
MIC-75M10-00A2	1-slot expansion module (1 x PCIe)
MIC-75M11-00B1	2-slot expansion module (1 x PCIe and 1 x PCI slots)
MIC-75M13-00B1	4-slot expansion module (1 x PCIe and 3 x PCI slots)
MIC-75M20-00C1	2-slot expansion module (2 x PCIe slots)
MIC-75M20-01A2**	2-slot expansion module (2 x PCIe slots)
MIC-75M40-01A2**	3-slot expansion module (3 x PCIe slots)
MIC-75G20-10C1	GPU card expansion module (2 x PCIe and 2 x removable 2.5" storage bay)
MIC-75G30-00C1**	Dual GPU card expansion module (3 x PCIe and 2 x removable 2.5" storage bay, 1 x HDMI, 1 x DP)
MIC-75GF10-00A1	MXM GPU expansion module (1 x MXM, 1 x PCIe and 2 x removable 2.5" storage bay, 1 x HDMI, 3 x DP)
MIC-75S00-00A1	2 x removable 2.5" storage bay
MIC-75S20-00A2	2-slot expansion storage module (2 x PCIe and 2 x removable 2.5" storage bay)
MIC-75S20-01A2	2-slot expansion storage module (2 x PCIe and 2 x removable 2.5" storage bay)
98R17520301	2 x 3.5" HDD kit

*Please refer to i-Module datasheet for more detail.
** R680E SKU only

Embedded OS

Part Number	Description
20706WLH1S0038	img W11 24HL MIC-770V3W 64b 24H2 ENU
20706WLV1S0038	img W11 24VL MIC-770V3W 64b 24H2 ENU
20706WLE1S0038	img W11 24EL MIC-770V3W 64b 24H2 ENU
20706WLH1S0041	img W11 24HL MIC-770V3H 64b 24H2 ENU
20706WLV1S0041	img W11 24VL MIC-770V3H 64b 24H2 ENU
20706WLE1S0041	img W11 24EL MIC-770V3H 64b 24H2 ENU
20706WX1HS0049	img W10 21HL MIC-770V3W 64b 21H2 ENU
20706WX1VS0049	img W10 21VL MIC-770V3W 64b 21H2 ENU
20706WX1ES0049	img W10 21EL MIC-770V3W 64b 21H2 ENU
20706WX1HS0058	img W10 21HL MIC-770V3H 64b 21H2 ENU
20706WX1VS0058	img W10 21VL MIC-770V3H 64b 21H2 ENU
20706WX1ES0058	img W10 21EL MIC-770V3H 64b 21H2 ENU
20706U22DS0021	img UbuntuD MIC-770V3W 64b 22.04 ENU
20706U24DS0021	img UbuntuD MIC-770V3W 64b 24.04 ENU

Optional Accessories

Part Number	Description
	Adaptor
96PSA-A230W24P4-3	ADP A/D 100-240V 230W 24V C14 TERMINAL BLOCK 4P
1702002600	Power cord (USA) UL/CSA, 3-pin, 10A, 125V, 1.83 M, 180 D
1700000237-31	Power Cord PSE 3P 12A 125V 183cm
1702002605	Power Cord (EU), 3-pin, 10A, 250V 1.83M, 90D
	Din Rail PSU
96PSD-A240W24-MN*	A/D 100-240V 240W 24V NDR DIN RAIL
1700031170-01	DC-DC power cord, A cable TEM*4/TEM*4 UL2464 18AWG 150cm
1700029720-01	AC-DC power cord (US), M cable AC CONN 3P 183cm
1700030520-01	AC-DC power cord (CN), M cable conn 3P CCC 10A 250V 150cm
1700034561-01	AC-DC power cord (EU), M cable Type E 3P/TEMx3 80CM

Note:
1. MIC-770 V3 supports Advantech iDoor modules (both MOS and PCM series), excluding the PoE model.
2. The **PCM** series module requires a bracket (P/N: **1960065854N021**) that must be ordered separately.

Optional Flex I/O* & Kits

Part Number	Description
	Flex I/O
AIIS-DIO32-00A1E**	AIIS GPIO module (32 bit)
PCA-TPMSPI-00A1	TPM 2.0 module (SPI)
98R17500001	MIC DVI FIO
98R17500101	MIC HDMI/Remote power on/off FIO
98R17500301	MIC HDMI kit FIO
98R17500401	MIC Remote power on/off FIO
98R17500601	MIC COMport kit FIO (4x COM RS-232 via 2x dual DB9 cable)
98R17500802	MIC Reset/Remote power on/off/5VDC kit FIO (SATA)
98R17500901	MIC GPIO kit FIO
98R17501001	MIC DP kit FIO
98R17501101	COM and HDMI kit
	Small Flex IO
98R17502000	MIC HDMI kit for SFIO
98R17503000	MIC Display Port kit for SFIO
98R17504000	MIC DVI kit for SFIO
98R17500701	MIC Remote Switch kit for SFIO
98R17500803	MIC Reset/Remote power on/off/5VDC kit FIO (SATA) for SFIO
	Advanced Flex I/O* **
98910770320	2 x 1GbE Ethernet Ports (Intel® i210-AT)
98910770330	4 x 1GbE Ethernet Ports (Intel® i210-AT), 1 x M.2 NVMe Slot
98910770340	2 x 2.5GbE Ethernet Ports (Intel® I226-V)
98910770350	4 x 2.5GbE Ethernet Ports (Intel® i226-V), 1 x M.2 NVMe Slot
98910770401	1 x M.2 NVMe Slot
98910770501****	4 x 1GbE Ethernet Ports with PoE (Intel® I350-AM4)
	Storage Kit
98R1752010E	2nd 2.5" HDD/SSD kit (used in 2-slot i-Module)
98R1752020E	2 x 2.5" SSD kit (Thickness: 7mm)
	Mounting Kit
98R17500210	MIC Din Rail Mounting kit
98R17500501	MIC Wall Mounting kit
	Fan Kit
98R17501303*****	MIC Fan Kit

* Please refer to Flex I/O datasheet for more detail.
** Can only be placed in the small FIO location and can't be installed with other flex IO.
*** R680E SKU only.
**** Can't be installed with other flex IO.
***** Only compatible with the MIC-770 standard SKU system without the i-module or extreme SKU.