coastipc.com | 866-412-6278 | info@coastipc.com

Nuvo-9000 Series

Nuvo-9000UL Series

User Manual

Revision 1.9

Rev101926

Table of Contents

Table of Contents **2**
Legal Information **5**
Contact Information **6**
Declaration of Conformity **6**
Copyright Notice **7**
Safety Precautions **8**
Service and Maintenance **10**
Entretien et ecessarie **10**
Hot Surface Warning **11**
Surface chaude **11**
Battery Warning **12**
Avertissement concernant les piles **12**
ESD Precautions **13**
Précautions ecessaries de décharge électrostatique (ESD) **13**
Restricted Access Location **14**
Lieu d'accès restreint **14**
About This Manual **15**

1 Introduction

1.1 Product Specifications **17**
1.1.1 Nuvo-9000E Specifications 17
1.1.2 Nuvo-9000E-UL Series Specifications 20
1.1.3 Nuvo-9000P Specifications 23
1.1.4 Nuvo-9000P-UL Series Specifications 26
1.1.5 Nuvo-9000DE Specifications 29
1.1.6 Nuvo-9000DE-UL Series Specifications 32
1.1.7 Nuvo-9000LP Specifications 35
1.1.8 Nuvo-9000LP-UL Series Specifications 38
1.2 Nuvo-9000E/ P Dimension **41**
1.2.1 Nuvo-9000E/ P Front Panel View 41
1.2.2 Nuvo-9000E/ P Rear Panel View 41
1.2.3 Nuvo-9000E/ P Top View 42
1.2.4 Nuvo-9000E/ P Bottom View 43
1.3 Nuvo-9000DE Dimension **44**
1.3.1 Nuvo-9000DE Front Panel View 44
1.3.2 Nuvo-9000DE Rear Panel view 44
1.3.3 Nuvo-9000DE Top View 45
1.3.4 Nuvo-9000DE Bottom View 46
1.4 Nuvo-9000LP Dimension **47**
1.4.1 Nuvo-9000LP Front Panel View 47
1.4.2 Nuvo-9000LP Rear Panel view 47
1.4.3 Nuvo-9000LP Top View 48
1.4.4 Nuvo-9000LP Bottom View 49

2 System Overview

2.1 Packing List **50**
2.1.1 Nuvo-9000E/ P Series Packing List 50
2.1.2 Nuvo-9000DE Series Packing List 50
2.1.3 Nuvo-9000LP Series Packing List 51
2.2 Front Panel I/O **52**
2.2.1 USB3.2 Gen2x1 Port 54
2.2.2 USB2.0 Port 54
2.2.3 CMOS Reset Button 55
2.2.4 DVI Port 56
2.2.5 VGA Port 57
2.2.6 USB3.2 Gen 1x1 Port 58
2.2.7 DisplayPort 59

2.2.8 USB3.2 Gen2x2 Type-C Port 60
2.2.9 2.5 Ethernet Port/ Optional PoE+ 61
2.2.10 Reset Button 62
2.2.11 LED Indicators 62
2.2.12 Power Button 63
2.2.13 Hot-swappable 2.5” HDD/ SSD Slot (Nuvo-9000LP Series Only) 63
2.2.14 Cassette Module 64
2.3 Rear Panel I/O 65
2.3.1 4-Pole 3.5mm Headphone/ Microphone Jack 67
2.3.2 COM Ports 68
2.3.3 3-Pin Terminal Block for DC and Ignition Input 69
2.3.4 3-Pin Remote On/ Off 69
2.4 Internal I/O Functions 70
2.4.1 Dual SODIMM DRAM Slot 70
2.4.2 mini-PCIe Socket & Pin Definition 71
2.4.3 M.2 2242/ 3042/ 3052 (B Key), Mini-SIM Card Slot & Pin Definition 73
2.4.4 SATA Ports 75
2.4.5 DIP Switch 76
2.4.6 On/ Off Ctrl & Status Output 77
2.4.7 Internal USB 2.0 Port 78
2.4.8 M.2 2280 (M Key) Slot for NVMe SSD 79
2.4.9 MezIO® Interface & Pin Definition 81

3 System Installation

3.1 Disassembling the System 84
3.2 Installing Internal Components 89
3.2.1 CPU Installation for Barebone System 89
3.2.2 Remove and Replace the Existing CPU 95
3.2.3 DDR5 SO-DIMM Installation 102
3.2.4 mPCIe Module, Mini-SIM (2FF) Card and Antenna Installation 104
3.2.5 M.2 2242/ 3042/ 3052 (B Key) Module and Micro-SIM (3FF) Card Installation 106
3.2.6 M.2 2280 NVMe SSD Installation 108
3.2.7 MezIO® Module Installation 110
3.3 Installing the System Enclosure 112
3.4 HDD/ SSD Installation 116
3.5 2.5” Hot-swappable Tray HDD/SSD Installation (Nuvo-9000LP Only) 119
3.6 Ethernet/ PoE+ Port Panel Screw Fix 120
3.7 PCIe/ PCI Card Installation into Cassette Module (Nuvo-9000E/ P/ DE Only) 121
3.8 Wall Mount Bracket/ DIN-rail Installation 126
3.8.1 Wall Mount Bracket Installation 126
3.8.2 DIN-rail Installation (Optional) 128
3.9 Powering On the System 129
3.9.1 Powering On Using the Power Button 129
3.9.2 Powering On Using External Non-latched Switch 130
3.9.3 Powering On Using Wake-on-LAN 131

4 System Configuration

4.1 BIOS Settings 133
4.1.1 COM Port Configuration 134
4.1.2 COM Port High Speed Mode 135
4.1.3 Delay for PEG Initialization 136
4.1.4 Volume Management Device (VMD) 137
4.1.5 TPM Availability 140
4.1.6 Secure Boot 141
4.1.7 Power over Ethernet (PoE) Power Enable 142
4.1.8 Auto Wake on S5 144
4.1.9 Power On After Power Failure Option 145
4.1.10 Power & Performance (CPU SKU Power Configuration) 146
4.1.11 Active Performance/Efficient Cores 147
4.1.12 Wake on LAN Option 148
4.1.13 Boot Menu 149

4.1.14 Add Boot Options (Position New Boot Device) 151
4.1.15 Watchdog Timer for Booting..... 152
4.2 AMT Configuration 153
4.3 RAID Configuration 155
4.3.1 Enabling Volume Management Device (VMD) for RAID Volume Setup 155
4.3.2 RAID Volume Setup 157
4.3.3 Loading RAID Driver for Windows Installation 164

5 OS Support and Driver Installation

5.1 Operating System Compatibility 167
5.2 System Driver Installation..... 168
5.3 Driver Installation for Watchdog Timer Control 168

Appendix A Using WDT & DIO

WDT and DIO Library Installation 170
WDT Functions..... 172
InitWDT 172
SetWDT 172
StartWDT 173
ResetWDT 173
StopWDT..... 173

Appendix B PoE On/ Off Control

GetStatusPoEPort 174
EnablePoEPort 175
DisablePoEPort 176

Legal Information

All Neousys Technology Inc. products shall be subject to the latest Standard Warranty Policy

Neousys Technology Inc. may modify, update or upgrade the software, firmware or any accompanying user documentation without any prior notice. Neousys Technology Inc. will provide access to these new software, firmware or documentation releases from download sections of our website or through our service partners.

Before installing any software, applications or components provided by a third party, customer should ensure that they are compatible and interoperable with Neousys Technology Inc. product by checking in advance with Neousys Technology Inc.. Customer is solely responsible for ensuring the compatibility and interoperability of the third party's products. Customer is further solely responsible for ensuring its systems, software, and data are adequately backed up as a precaution against possible failures, alternation, or loss.

For questions in regards to hardware/ software compatibility, customers should contact Neousys Technology Inc. sales representative or technical support.

To the extent permitted by applicable laws, Neousys Technology Inc. shall NOT be responsible for any interoperability or compatibility issues that may arise when (1) products, software, or options not certified and supported; (2) configurations not certified and supported are used; (3) parts intended for one system is installed in another system of different make or model.

Declaration of Conformity

FCC	This equipment has been tested and found to comply with the limits for a Class A digital device, pursuant to part 15 of the FCC Rules. These limits are designed to provide reasonable protection against harmful interference when the equipment is operated in a commercial environment. This equipment generates, uses, and can radiate radio frequency energy and, if not installed and used in accordance with the instruction manual, may cause harmful interference to radio communications. Operation of this equipment in a residential area is likely to cause harmful interference in which case the user will be required to correct the interference at own expense.
CE	The product(s) described in this manual complies with all applicable European Union (CE) directives if it has a CE marking. For computer systems to remain CE compliant, only CE-compliant parts may be used. Maintaining CE compliance also requires proper cable and cabling techniques.

Copyright Notice

All rights reserved. This publication may not be reproduced, transmitted, transcribed, stored in a retrieval system, or translated into any language or computer language, in any form or by any means, electronic, mechanical, magnetic, optical, chemical, manual or otherwise, without the prior written consent of Neousys Technology, Inc.

Disclaimer

This manual is intended to be used as an informative guide only and is subject to change without prior notice. It does not represent commitment from Neousys Technology Inc. Neousys Technology Inc. shall not be liable for any direct, indirect, special, incidental, or consequential damages arising from the use of the product or documentation, nor for any infringement on third party rights.

Patents and Trademarks

Neousys, the Neousys logo, Expansion Cassette, MezIO™ are registered patents and trademarks of Neousys Technology, Inc.

Windows is a registered trademark of Microsoft Corporation.

Intel®, Core™ are registered trademarks of Intel Corporation

NVIDIA® is a registered trademark of NVIDIA Corporation

All other names, brands, products or services are trademarks or registered trademarks of their respective owners.

Safety Precautions

- Read these instructions carefully before you install, operate, or transport the system.
- Install the system or DIN rail associated with, at a sturdy location
- Install the power socket outlet near the system where it is easily accessible
- Secure each system module(s) using its retaining screws
- Place power cords and other connection cables away from foot traffic. Do not place items over power cords and make sure they do not rest against data cables
- Shutdown, disconnect all cables from the system and ground yourself before touching internal modules
- Ensure that the correct power range is being used before powering the device
- Should a module fail, arrange for a replacement as soon as possible to minimize down-time
- By means of a power cord connected to a socket-outlet with earthing connection
- This product is intended to be supplied by a Listed Power Adapter or DC power source, rated 12-35Vdc, 16A, Tma 60 degree C and 5000m altitude during operation. If further assistance is required, please contact Neousys Technology
- If the system is not going to be used for a long time, disconnect it from mains (power socket) to avoid transient over-voltage

Mesures de sécurité

- Lire attentivement ces directives avant d'installer, d'utiliser ou de transporter le système.
- Installer le système ou la barrette DIN qui lui est associée, à un endroit solide
- Installer la prise de courant près du système et pour qu'elle soit facilement accessible
- Fixer chaque module du système à l'aide de ses vis de fixation
- Éloigner de la circulation piétonne les cordons d'alimentation et autres câbles de connexion. Ne jamais placer d'objets sur les cordons d'alimentation et s'assurer qu'ils ne reposent pas contre les câbles de données
- Avant de toucher les modules internes, arrêter, débrancher tous les câbles du système et raccordez-vous à la terre
- S'assurer que la bonne plage de puissance est utilisée avant d'alimenter l'appareil
- Prévoir un remplacement dès que possible en cas de défaillance d'un module, afin de minimiser les temps d'arrêt
- Au moyen d'un cordon d'alimentation branché à une prise de courant avec mise à la terre (MALT)
- Ce produit doit être alimenté par un adaptateur de courant homologué ou une source d'alimentation CC, de 12-35 Vcc et 16 A, conçue pour fonctionner à 60 ºC Tma et à 5 000 m d'altitude. Communiquer avec Neousys Technology si de l'assistance supplémentaire est requise
- Si le système ne sera pas être utilisé pendant une période prolongée, le débrancher du réseau (prise de courant) pour éviter une surtension transitoire

Service and Maintenance

- ONLY qualified personnel should service the system
- Shutdown the system, disconnect the power cord and all other connections before servicing the system
- When replacing/ installing additional components (expansion card, memory module, etc.), insert them as gently as possible while assuring proper connector engagement

Entretien et ecessarie

- La réparation du système ne peut être effectuée que par du personnel qualifié
- Avant de réparer le système, arrêter le système, débrancher le cordon d’alimentation et toutes les autres connexions
- Lors du remplacement ou de l’installation de composants supplémentaires (carte d’extension, module de mémoire, etc.), les insérer le plus doucement possible tout en s’assurant que les connecteurs sont bien engagés jusqu’au bout

Hot Surface Warning

HOT SURFACE. DO NOT TOUCH. “ATTENTION: Surface chaude. Ne pas toucher.”

WARNING!

Components/ parts inside the equipment may be hot to touch! Please wait one-half hour after switching off before handling parts.

Surface chaude

AVERTISSEMENT : *SURFACE CHAUDE. NE PAS TOUCHER.*

Les composants et ecess à l’intérieur de l’équipement peuvent être chauds au toucher. Après l’arrêt, attendre au moins 30 minutes pour que le système refroidisse avant d’effectuer l’entretien.

- Respecter les règles de sécurité et d’entretien mentionnées au début du guide d’utilisation!

Battery Warning

- Batteries are at risk of exploding if incorrectly installed
- Do not attempt to recharge, force open, or heat the battery
- Replace the battery only with the same or equivalent type recommended by the manufacturer

Avertissement concernant les piles

- Les piles risquent d'exploser si ece sont mal installées.
- Ne jamais essayer de recharger, d'ouvrir de force ou de chauffer les piles.
- Remplacer les piles uniquement avec le 12ece type ou l'équivalent recommandé par le fabricant.

ESD Precautions

- Handle add-on module, motherboard by their retention screws or the module's frame/ heat sink. Avoid touching the PCB circuit board or add-on module connector pins
- Use a grounded wrist strap and an anti-static work pad to discharge static electricity when installing or maintaining the system
- Avoid dust, debris, carpets, plastic, vinyl and styrofoam in your work area.
- Do not remove any module or component from its anti-static bag before installation

Précautions ecessaries de décharge électrostatique (ESD)

- Tenir le module complémentaire et la carte mère par leurs vis de rétention ou le châssis/dissipateur de chaleur du module. Éviter de toucher la carte de circuit imprimé ou les broches du connecteur du module complémentaire
- Afin de décharger l'électricité statique, utiliser une dragonne mise à la terre et un tapis de travail antistatique lors de l'installation ou de l'entretien du système
- Éviter la poussière, les débris, les tapis, le plastique, le vinyle et la mousse de polystyrène dans votre zone de travail.
- Ne retirer aucun module ou composant de son sac antistatique avant l'installation

Restricted Access Location

The controller is intended for installation only in certain environments where both of the following conditions apply:

- Access can only be gained by QUALIFIED SERVICE PERSONNEL who have been instructed on the reasons for restrictions applied to the location and any precautions that shall be taken
- Access is through the use of a TOOL, lock and key, or other means of security, and is controlled by the authority responsible for the location

Lieu d’accès restreint

Le contrôleur doit être installé uniquement dans les environnements où les deux conditions suivantes sont présentes :

- Le lieu ne peut être accédé que par du PERSONNEL TECHNIQUE QUALIFIÉ informé des raisons des restrictions appliquées à l’emplacement et des précautions à prendre
- L’accès est contrôlé par l’autorité responsable de l’emplacement et se fait au moyen d’un OUTIL, d’une serrure et d’une clé ou d’autres moyens de sécurité

About This Manual

This manual introduces Neousys Nuvo-9000 series featuring Intel® Core™ processor (Series 2) with P-cores/ 14th/ 13th/ 12th Gen Core™ hybrid performance/ efficient core processors. The guide also demonstrates the system's installation procedures.

Applicable systems:

System	Description
Nuvo-9002E (UL)	Intel® Core™ processor (Series 2) with P-cores/ 14th/ 13th/ 12th Gen Core™ fanless embedded controller with 2x GbE, 1-slot PCIe Cassette and MezIO™
Nuvo-9002P (UL)	Intel® Core™ processor (Series 2) with P-cores/ 14th/ 13th/ 12th Gen Core™ fanless embedded controller with 2x GbE, 1-slot PCI Cassette and MezIO™
Nuvo-9002DE (UL)	Intel® Core™ processor (Series 2) with P-cores/ 14th/ 13th/ 12th Gen Core™ fanless embedded controller with 2x GbE, 2-slot PCIe Cassette and MezIO™
Nuvo-9006E (UL)	Intel® Core™ processor (Series 2) with P-cores/ 14th/ 13th/ 12th Gen Core™ fanless embedded controller with 6x GbE, 1-slot PCIe Cassette and MezIO™
Nuvo-9006P (UL)	Intel® Core™ processor (Series 2) with P-cores/ 14th/ 13th/ 12th Gen Core™ fanless embedded controller with 6x GbE, 1-slot PCI Cassette and MezIO™
Nuvo-9006DE (UL)	Intel® Core™ processor (Series 2) with P-cores/ 14th/ 13th/ 12th Gen Core™ fanless embedded controller with 6x GbE, 2-slot PCIe Cassette and MezIO™

Revision History

Version	Date	Description
1.0	Nov. 2022	Initial release
1.1	Dec. 2022	• Updated BIOS: CPU Configuration – Active Performance/ Efficient Cores setting • Updated M.2 2242/ 3042/ 3052 B key slot
1.2	Apr. 2023	Added support for Intel® 13th Gen Core CPUs
1.3	Jul. 2023	Updated Disassembly/ installation images
1.4	Jun. 2024	Added support for Intel® 14th Gen processors
1.5	Sep. 2025	Updated M.2 2242/ 3042/ 3052 (B Key) pin definition
1.6	Oct. 2025	Updated Ethernet and DRAM specifications
1.7	Mar. 2026	Updated NVMe heatsink/ thermal specifications
1.8	Jul. 2026	Updated Nuvo-9000LP applicable systems
1.9	Sep. 2026	Updated UL specifications; added support for Intel® Core™ (Series 2) CPUs

1 Introduction

Nuvo-9000 series is Neousys' new rugged embedded computer based on Intel® Core™ processor (Series 2) with P-cores/14th/13th/12th-Gen platform. Benefiting from cutting-edge Intel® 7 photolithography, the Intel® Core™ desktop processor comes with up to 24 cores and 32 threads and presents an incredible boost of computational performance. In addition, the latest Intel® Core™ processor (Series 2) with P-cores introduces a P-core only architecture with up to 12 P-cores and no E-cores, allowing applications to leverage more high-performance cores for enhanced computing capability. Combining the increase of DDR5 memory bandwidth and PCIe Gen4 NVMe high-speed disk read/write, users can expect an overall system performance improvement of up to 2x when compared to previous 10th or 11th- Gen platforms.

Nuvo-9000 series inherits Neousys' patented expansion Cassette design to provide great versatility by allowing additional installation of PCIe or PCI add-on cards. There are three expansion Cassette options available for Nuvo-9000 series, the Nuvo-9000E features a single x16 Gen3 PCIe slot; Nuvo-9000DE has dual x16 PCIe slots, and Nuvo-9000P has a single PCI slot. For users who need more flexible storage, Nuvo-9000LP has a 2.5" HDD tray instead of an expansion Cassette to support a hot swappable 2.5" HDD/SSD.

I/O functions are also comprehensively enhanced. In addition to six 2.5Gb and Gigabit Ethernet ports with PoE+ PSE option, Nuvo-9000 series features a USB 3.2 Gen2x2 type-C port offering 20 Gbps bandwidth for data exchange with external devices, plus another six USB 3.2 type-A ports for USB3 camera connectivity. It also has an upgraded M.2 Gen4x4 slot to support the latest NVMe SSD to boost disk read/write speed up to 7000 MB/s. For unfulfilled I/O requirements, users can utilize the expansion Cassette to add on function-specific PCIe/ PCI card, the proprietary MezIO® interface, and internal mini-PCIe/ M.2 interfaces.

With its field-proven thermal design, significant CPU and I/O upgrades, and multiple expansion methods, the Neousys Nuvo-9000 series fits your need for ruggedness, performance, and versatility in a variety of applications.

1.1 Product Specifications

1.1.1 Nuvo-9000E Specifications

Applicable systems: Nuvo-9002E/ 9006E/ 9006E-PoE

System Core	
Processor	Supporting Intel® Core™ processor (Series 2) with P-cores (LGA1700 socket, 65W/ 45W TDP) - Intel® Core™ 9 273PE/ 273PTE - Intel® Core™ 7 253PE/ 253PTE - Intel® Core™ 5 223PE/ 223PTE Supporting Intel® Core™ processor (Series 2) (LGA1700 socket, 65W/ 45W TDP) - Intel® Core™ 7 251E/ 251TE - Intel® Core™ 5 221E/ 221TE - Intel® Core™ 3 201E/ 201TE Supports Intel® 14th-Gen Core™ CPU (LGA1700 socket, 65W/ 35W TDP) - Intel® Core™ i9-14900/ i9-14900T - Intel® Core™ i7-14700/ i7-14700T - Intel® Core™ i5-14500/ i5-14400/ i5-14500T - Intel® Core™ i3-14100/ i3-14100T Supports Intel® 13th-Gen Core™ CPU (LGA1700 socket, 65W/ 35W TDP) - Intel® Core™ i9-13900E/ i9-13900TE - Intel® Core™ i7-13700E/ i7-13700TE - Intel® Core™ i5-13500E/ i5-13400E/ i5-13500TE - Intel® Core™ i3-13100E/ i3-13100TE Supports Intel® 12th-Gen Core™ CPU (LGA1700 socket, 35W/ 65W TDP) - Intel® Core™ i9-12900E/ i9-12900TE - Intel® Core™ i7-12700E/ i7-12700TE - Intel® Core™ i5-12500E/ i5-12500TE - Intel® Core™ i3-12100E/ i3-12100TE - Intel® Pentium® G7400E/ G7400TE - Intel® Celeron® G6900E/ G6900TE
Chipset	Intel® Q670E Platform Controller Hub
Graphics	Integrated Intel® UHD Graphics 770 (32EU)/ 730 (24EU)
Memory	Up to 128GB DDR5 4800 (two SODIMM slots)
AMT	Supports Intel vPro/ AMT 16.0

TPM	Supports dTPM 2.0
I/O Interface	
Ethernet port	**Nuvo-9002E**: 1x 2.5GbE by I226-IT and 1GbE by I219 with screw-lock **Nuvo-9006E:** 5x 2.5GbE by I226-IT and 1x GbE by I219 with screw-lock
PoE+	Optional IEEE 802.3at PoE+ PSE for Port 3 ~ Port 6 (100 W total power budget)
USB	1x USB 3.2 Gen2x2 (20 Gbps) port in type-C connector with screw-lock 4x USB 3.2 Gen2x1 (10 Gbps) ports in type-A connectors 2x USB 3.2 Gen 1x1 (5 Gbps) ports in type-A connectors 2x USB 2.0 ports
Video Port	1x VGA connector, supporting 1920 x 1200 resolution 1x DVI-D connector, supporting 1920 x 1200 resolution 1x DisplayPort connector, supporting 4096 x 2304 resolution
Serial Port	2x software-programmable RS-232/ 422/ 485 ports (COM1/ COM2) 2x RS-232 ports (COM3/ COM4)
Audio	1x 3.5 mm jack for mic-in and speaker-out
Storage Interface	
SATA HDD	2x internal SATA ports for 2.5” HDD/ SSD (up to 15mm thickness), supporting RAID 0/1
M.2 NVMe	1x M.2 2280 M key NVMe socket (PCIe Gen4 x4) for NVMe SSD
Internal Expansion Bus	
PCI Express Slot	1x PCIe x16 slot@Gen3, 8-lanes PCIe signals in Cassette module
Mini PCI-E	1x full-size mini PCI Express socket
M.2	1x M.2 2242/ 3052 B key socket with SIM slot for M.2 5G/ 4G module
Expandable I/O	1x MezIO® expansion port for Neousys MezIO® modules
Power Supply	
DC Input	1x 3-pin pluggable terminal block for 8~48VDC DC input
Remote Ctrl. &LED Output	1x 3-pin pluggable terminal block for remote control and PWR LED output
Maximum Power Consumption	With i7-12700 (65W mode): 141.4W (Max.) @ 24V With i7-12700 (65W mode): 146.4W (Max.) @ 48V With i7-12700TE (35W mode): 106.6W (Max.) @ 24V With i7-12700TE (35W mode): 111.8W (Max.) @ 48V With i5-12400 (35W mode): 105.1W (Max.) @ 24V With i5-12400 (35W mode): 110.9W (Max.) @ 48V With i5-12400 (65W mode): 120.5W (Max.) @ 24V

	With i5-12400 (65W mode): 126.2W (Max.) @ 48V
Mechanical	
Dimension	240 mm (W) x 225 mm (D) x 90 mm (H)
Weight	4.4Kg (approx.)
Mounting	Wall-mounting (standard) or DIN-rail mounting (optional)
Environmental	
Operating Temperature	**With 35W CPU** -25°C to 70°C * **With 45W CPU** -25°C to 60°C * **With 65W CPU** -25°C to 70°C */ ** (configured as 35W TDP) -25°C to 50°C */ ** (configured as 65W TDP)
Storage Temperature	-40°C to 85°C
Humidity	10% to 90%, non-condensing
Vibration	MIL-STD-810H, Method 514.8, Category 4
Shock	MIL-STD-810H, Method 516.8, Procedure I
EMC	CE/ FCC Class A, according to EN 55032 & EN 55035

** For sub-zero operating temperature, a wide temperature HDD or Solid State Disk (SSD) is required.*

*** For CPU operating at 65W mode, the highest operating temperature shall be limited to 50°C and thermal throttling may occur when sustained full-loading applied. Users can configure CPU power in BIOS to allow higher operating temperature.*

1.1.2 Nuvo-9000E-UL Series Specifications

System Core	
Processor	Supporting Intel® Core™ processor (Series 2) with P-cores (LGA1700 socket, 65W/ 45W TDP) - Intel® Core™ 9 273PE/ 273PTE - Intel® Core™ 7 253PE/ 253PTE - Intel® Core™ 5 223PE/ 223PTE Supporting Intel® Core™ processor (Series 2) (LGA1700 socket, 65W/ 45W TDP) - Intel® Core™ 7 251E/ 251TE - Intel® Core™ 5 221E/ 221TE - Intel® Core™ 3 201E/ 201TE Supports Intel® 14th-Gen Core™ CPU (LGA1700 socket, 65W/ 35W TDP) - Intel® Core™ i9-14900/ i9-14900T - Intel® Core™ i7-14700/ i7-14700T - Intel® Core™ i5-14500/ i5-14400/ i5-14500T - Intel® Core™ i3-14100/ i3-14100T Supports Intel® 13th-Gen Core™ CPU (LGA1700 socket, 65W/ 35W TDP) - Intel® Core™ i9-13900E/ i9-13900TE - Intel® Core™ i7-13700E/ i7-13700TE - Intel® Core™ i5-13500E/ i5-13400E/ i5-13500TE - Intel® Core™ i3-13100E/ i3-13100TE Supports Intel® 12th-Gen Core™ CPU (LGA1700 socket, 35W/ 65W TDP) - Intel® Core™ i9-12900E/ i9-12900TE - Intel® Core™ i7-12700E/ i7-12700TE - Intel® Core™ i5-12500E/ i5-12500TE - Intel® Core™ i3-12100E/ i3-12100TE - Intel® Pentium® G7400E/ G7400TE - Intel® Celeron® G6900E/ G6900TE
Chipset	Intel® Q670E Platform Controller Hub
Graphics	Integrated Intel® UHD Graphics 770 (32EU)/ 730 (24EU)
Memory	Up to 64GB DDR5 4800 (two SODIMM slots)
AMT	Supports Intel vPro/ AMT 16.0
TPM	Supports dTPM 2.0
I/O Interface	
Ethernet port	**Nuvo-9002E(-UL)**: 1x 2.5GbE by I226-IT and 1GbE by I219 with screw-lock

	Nuvo-9006E(-UL): 5x 2.5GbE by I226-IT and 1x GbE by I219 with screw-lock
PoE+	Optional IEEE 802.3at PoE+ PSE for Port 3 ~ Port 6 (100 W total power budget)
USB	1x USB 3.2 Gen2x2 (20 Gbps) port in type-C connector with screw-lock 4x USB 3.2 Gen2x1 (10 Gbps) ports in type-A connectors 2x USB 3.2 Gen 1x1 (5 Gbps) ports in type-A connectors 2x USB 2.0 ports
Video Port	1x VGA connector, supporting 1920 x 1200 resolution 1x DVI-D connector, supporting 1920 x 1200 resolution 1x DisplayPort connector, supporting 4096 x 2304 resolution
Serial Port	2x software-programmable RS-232/ 422/ 485 ports (COM1/ COM2) 2x RS-232 ports (COM3/ COM4)
Audio	1x 3.5 mm jack for mic-in and speaker-out
Storage Interface	
SATA HDD	2x internal SATA ports for 2.5” HDD/ SSD (up to 15mm thickness), supporting RAID 0/1
M.2 NVMe	1x M.2 2280 M key NVMe socket (PCIe Gen4 x4) for NVMe SSD
Internal Expansion Bus	
PCI Express Slot	1x PCIe x16 slot@Gen3, 8-lanes PCIe signals in Cassette module
Mini PCI-E	1x full-size mini PCI Express socket
M.2	1x M.2 2242/ 3052 B key socket with SIM slot for M.2 5G/ 4G module
Expandable I/O	1x MezIO® expansion port for Neousys MezIO® modules
Power Supply	
DC Input	1x 3-pin pluggable terminal block for 24V DC input
Remote Ctrl. &LED Output	1x 3-pin pluggable terminal block for remote control and PWR LED output
Maximum Power Consumption	With i7-12700 (65W mode): 141.4W (Max.) @ 24V With i7-12700TE (35W mode): 106.6W (Max.) @ 24V With i5-12400 (35W mode): 105.1W (Max.) @ 24V With i5-12400 (65W mode): 120.5W (Max.) @ 24V
Mechanical	
Dimension	240 mm (W) x 225 mm (D) x 90 mm (H)
Weight	4.4Kg (approx.)
Mounting	Wall-mounting (standard) or DIN-rail mounting (optional)
Environmental	
Operating	**With 35W CPU**

Temperature	-25°C to 70°C * **With 45W CPU** -25°C to 60°C * **With 65W CPU** -25°C to 70°C */ ** (configured as 35W TDP) -25°C to 50°C */ ** (configured as 65W TDP)
Storage Temperature	-40°C to 85°C
Humidity	10% to 90%, non-condensing
Vibration	MIL-STD-810H, Method 514.8, Category 4
Shock	MIL-STD-810H, Method 516.8, Procedure I
EMC	CE/ FCC Class A, according to EN 55032 & EN 55035

** For sub-zero operating temperature, a wide temperature HDD or Solid State Disk (SSD) is required.*

*** For CPU operating at 65W mode, the highest operating temperature shall be limited to 50°C and thermal throttling may occur when sustained full-loading applied. Users can configure CPU power in BIOS to allow higher operating temperature.*

1.1.3 Nuvo-9000P Specifications

Applicable systems: Nuvo-9002P/ 9006P/ 9006P-PoE

System Core	
Processor	Supporting Intel® Core™ processor (Series 2) with P-cores (LGA1700 socket, 65W/ 45W TDP) - Intel® Core™ 9 273PE/ 273PTE - Intel® Core™ 7 253PE/ 253PTE - Intel® Core™ 5 223PE/ 223PTE Supporting Intel® Core™ processor (Series 2) (LGA1700 socket, 65W/ 45W TDP) - Intel® Core™ 7 251E/ 251TE - Intel® Core™ 5 221E/ 221TE - Intel® Core™ 3 201E/ 201TE Supports Intel® 14th-Gen Core™ CPU (LGA1700 socket, 65W/ 35W TDP) - Intel® Core™ i9-14900/ i9-14900T - Intel® Core™ i7-14700/ i7-14700T - Intel® Core™ i5-14500/ i5-14400/ i5-14500T - Intel® Core™ i3-14100/ i3-14100T Supports Intel® 13th-Gen Core™ CPU (LGA1700 socket, 65W/ 35W TDP) - Intel® Core™ i9-13900E/ i9-13900TE - Intel® Core™ i7-13700E/ i7-13700TE - Intel® Core™ i5-13500E/ i5-13400E/ i5-13500TE - Intel® Core™ i3-13100E/ i3-13100TE Supports Intel® 12th-Gen Core™ CPU (LGA1700 socket, 35W/ 65W TDP) - Intel® Core™ i9-12900E/ i9-12900TE - Intel® Core™ i7-12700E/ i7-12700TE - Intel® Core™ i5-12500E/ i5-12500TE - Intel® Core™ i3-12100E/ i3-12100TE - Intel® Pentium® G7400E/ G7400TE - Intel® Celeron® G6900E/ G6900TE
Chipset	Intel® Q670E Platform Controller Hub
Graphics	Integrated Intel® UHD Graphics 770 (32EU)/ 730 (24EU)
Memory	Up to 128GB DDR5 4800 (two SODIMM slots)
AMT	Supports Intel vPro/ AMT 16.0
TPM	Supports dTPM 2.0

I/O Interface	
Ethernet port	**Nuvo-9002P**: 1x 2.5GbE by I226-IT and 1GbE by I219 with screw-lock **Nuvo-9006P:** 5x 2.5GbE by I226-IT and 1x GbE by I219 with screw-lock
PoE+	Optional IEEE 802.3at PoE+ PSE for Port 3 ~ Port 6 (100 W total power budget)
USB	1x USB 3.2 Gen2x2 (20 Gbps) port in type-C connector with screw-lock 4x USB 3.2 Gen2x1 (10 Gbps) ports in type-A connectors 2x USB 3.2 Gen 1x1 (5 Gbps) ports in type-A connectors 2x USB 2.0 ports
Video Port	1x VGA connector, supporting 1920 x 1200 resolution 1x DVI-D connector, supporting 1920 x 1200 resolution 1x DisplayPort connector, supporting 4096 x 2304 resolution
Serial Port	2x software-programmable RS-232/ 422/ 485 ports (COM1/ COM2) 2x RS-232 ports (COM3/ COM4)
Audio	1x 3.5 mm jack for mic-in and speaker-out
Storage Interface	
SATA HDD	2x internal SATA ports for 2.5” HDD/ SSD (up to 15mm thickness), supporting RAID 0/1
M.2 NVMe	1x M.2 2280 M key NVMe socket (PCIe Gen4 x4) for NVMe SSD
Internal Expansion Bus	
PCI Slot	1x 32bit/ 33MHz PCI slot in Cassette module
Mini PCI-E	1x full-size mini PCI Express socket
M.2	1x M.2 2242/ 3052 B key socket with SIM slot for M.2 5G/ 4G module
Expandable I/O	1x MezIO® expansion port for Neousys MezIO® modules
Power Supply	
DC Input	1x 3-pin pluggable terminal block for 8~48VDC DC input
Remote Ctrl. &LED Output	1x 3-pin pluggable terminal block for remote control and PWR LED output
Maximum Power Consumption	With i7-12700 (65W mode): 141.4W (Max.) @ 24V With i7-12700 (65W mode): 146.4W (Max.) @ 48V With i7-12700TE (35W mode): 106.6W (Max.) @ 24V With i7-12700TE (35W mode): 111.8W (Max.) @ 48V With i5-12400 (35W mode): 105.1W (Max.) @ 24V With i5-12400 (35W mode): 110.9W (Max.) @ 48V With i5-12400 (65W mode): 120.5W (Max.) @ 24V With i5-12400 (65W mode): 126.2W (Max.) @ 48V
Mechanical	

Dimension	240 mm (W) x 225 mm (D) x 90 mm (H)
Weight	4.4Kg (approx.)
Mounting	Wall-mounting (standard) or DIN-rail mounting (optional)
Environmental	
Operating Temperature	**With 35W CPU** -25°C to 70°C * **With 45W CPU** -25°C to 60°C * **With 65W CPU** -25°C to 70°C */ ** (configured as 35W TDP) -25°C to 50°C */ ** (configured as 65W TDP)
Storage Temperature	-40°C to 85°C
Humidity	10% to 90%, non-condensing
Vibration	MIL-STD-810H, Method 514.8, Category 4
Shock	MIL-STD-810H, Method 516.8, Procedure I
EMC	CE/ FCC Class A, according to EN 55032 & EN 55035

** For sub-zero operating temperature, a wide temperature HDD or Solid State Disk (SSD) is required.*

*** For CPU operating at 65W mode, the highest operating temperature shall be limited to 50°C and thermal throttling may occur when sustained full-loading applied. Users can configure CPU power in BIOS to allow higher operating temperature.*

1.1.4 Nuvo-9000P-UL Series Specifications

System Core	
Processor	Supporting Intel® Core™ processor (Series 2) with P-cores (LGA1700 socket, 65W/ 45W TDP) - Intel® Core™ 9 273PE/ 273PTE - Intel® Core™ 7 253PE/ 253PTE - Intel® Core™ 5 223PE/ 223PTE Supporting Intel® Core™ processor (Series 2) (LGA1700 socket, 65W/ 45W TDP) - Intel® Core™ 7 251E/ 251TE - Intel® Core™ 5 221E/ 221TE - Intel® Core™ 3 201E/ 201TE Supports Intel® 14th-Gen Core™ CPU (LGA1700 socket, 65W/ 35W TDP) - Intel® Core™ i9-14900/ i9-14900T - Intel® Core™ i7-14700/ i7-14700T - Intel® Core™ i5-14500/ i5-14400/ i5-14500T - Intel® Core™ i3-14100/ i3-14100T Supports Intel® 13th-Gen Core™ CPU (LGA1700 socket, 65W/ 35W TDP) - Intel® Core™ i9-13900E/ i9-13900TE - Intel® Core™ i7-13700E/ i7-13700TE - Intel® Core™ i5-13500E/ i5-13400E/ i5-13500TE - Intel® Core™ i3-13100E/ i3-13100TE Supports Intel® 12th-Gen Core™ CPU (LGA1700 socket, 35W/ 65W TDP) - Intel® Core™ i9-12900E/ i9-12900TE - Intel® Core™ i7-12700E/ i7-12700TE - Intel® Core™ i5-12500E/ i5-12500TE - Intel® Core™ i3-12100E/ i3-12100TE - Intel® Pentium® G7400E/ G7400TE - Intel® Celeron® G6900E/ G6900TE
Chipset	Intel® Q670E Platform Controller Hub
Graphics	Integrated Intel® UHD Graphics 770 (32EU)/ 730 (24EU)
Memory	Up to 64GB DDR5 4800 (two SODIMM slots)
AMT	Supports Intel vPro/ AMT 16.0
TPM	Supports dTPM 2.0
I/O Interface	
Ethernet port	**Nuvo-9002P(-UL)**: 1x 2.5GbE by I226-IT and 1GbE by I219 with screw-lock

	Nuvo-9006P(-UL): 5x 2.5GbE by I226-IT and 1x GbE by I219 with screw-lock
PoE+	Optional IEEE 802.3at PoE+ PSE for Port 3 ~ Port 6 (100 W total power budget)
USB	1x USB 3.2 Gen2x2 (20 Gbps) port in type-C connector with screw-lock 4x USB 3.2 Gen2x1 (10 Gbps) ports in type-A connectors 2x USB 3.2 Gen 1x1 (5 Gbps) ports in type-A connectors 2x USB 2.0 ports
Video Port	1x VGA connector, supporting 1920 x 1200 resolution 1x DVI-D connector, supporting 1920 x 1200 resolution 1x DisplayPort connector, supporting 4096 x 2304 resolution
Serial Port	2x software-programmable RS-232/ 422/ 485 ports (COM1/ COM2) 2x RS-232 ports (COM3/ COM4)
Audio	1x 3.5 mm jack for mic-in and speaker-out
Storage Interface	
SATA HDD	2x internal SATA ports for 2.5” HDD/ SSD (up to 15mm thickness), supporting RAID 0/1
M.2 NVMe	1x M.2 2280 M key NVMe socket (PCIe Gen4 x4) for NVMe SSD
Internal Expansion Bus	
PCI Slot	1x 32bit/ 33MHz PCI slot in Cassette module
Mini PCI-E	1x full-size mini PCI Express socket
M.2	1x M.2 2242/ 3052 B key socket with SIM slot for M.2 5G/ 4G module
Expandable I/O	1x MezIO® expansion port for Neousys MezIO® modules
Power Supply	
DC Input	1x 3-pin pluggable terminal block for 24V DC input
Remote Ctrl. &LED Output	1x 3-pin pluggable terminal block for remote control and PWR LED output
Maximum Power Consumption	With i7-12700 (65W mode): 141.4W (Max.) @ 24V With i7-12700TE (35W mode): 106.6W (Max.) @ 24V With i5-12400 (35W mode): 105.1W (Max.) @ 24V With i5-12400 (65W mode): 120.5W (Max.) @ 24V
Mechanical	
Dimension	240 mm (W) x 225 mm (D) x 90 mm (H)
Weight	4.4Kg (approx.)
Mounting	Wall-mounting (standard) or DIN-rail mounting (optional)
Environmental	
Operating Temperature	**With 35W CPU** -25°C to 70°C *

	With 45W CPU -25°C to 60°C * **With 65W CPU** -25°C to 70°C */ ** (configured as 35W TDP) -25°C to 50°C */ ** (configured as 65W TDP)
Storage Temperature	-40°C to 85°C
Humidity	10% to 90%, non-condensing
Vibration	MIL-STD-810H, Method 514.8, Category 4
Shock	MIL-STD-810H, Method 516.8, Procedure I
EMC	CE/ FCC Class A, according to EN 55032 & EN 55035

** For sub-zero operating temperature, a wide temperature HDD or Solid State Disk (SSD) is required.*

*** For CPU operating at 65W mode, the highest operating temperature shall be limited to 50°C and thermal throttling may occur when sustained full-loading applied. Users can configure CPU power in BIOS to allow higher operating temperature*

1.1.5 Nuvo-9000DE Specifications

Applicable systems: Nuvo-9002DE/ 9006DE/ 9006DE-PoE

System Core	
Processor	Supporting Intel® Core™ processor (Series 2) with P-cores (LGA1700 socket, 65W/ 45W TDP) - Intel® Core™ 9 273PE/ 273PTE - Intel® Core™ 7 253PE/ 253PTE - Intel® Core™ 5 223PE/ 223PTE Supporting Intel® Core™ processor (Series 2) (LGA1700 socket, 65W/ 45W TDP) - Intel® Core™ 7 251E/ 251TE - Intel® Core™ 5 221E/ 221TE - Intel® Core™ 3 201E/ 201TE Supports Intel® 14th-Gen Core™ CPU (LGA1700 socket, 65W/ 35W TDP) - Intel® Core™ i9-14900/ i9-14900T - Intel® Core™ i7-14700/ i7-14700T - Intel® Core™ i5-14500/ i5-14400/ i5-14500T - Intel® Core™ i3-14100/ i3-14100T Supports Intel® 13th-Gen Core™ CPU (LGA1700 socket, 65W/ 35W TDP) - Intel® Core™ i9-13900E/ i9-13900TE - Intel® Core™ i7-13700E/ i7-13700TE - Intel® Core™ i5-13500E/ i5-13400E/ i5-13500TE - Intel® Core™ i3-13100E/ i3-13100TE Supports Intel® 12th-Gen Core™ CPU (LGA1700 socket, 35W/ 65W TDP) - Intel® Core™ i9-12900E/ i9-12900TE - Intel® Core™ i7-12700E/ i7-12700TE - Intel® Core™ i5-12500E/ i5-12500TE - Intel® Core™ i3-12100E/ i3-12100TE - Intel® Pentium® G7400E/ G7400TE - Intel® Celeron® G6900E/ G6900TE
Chipset	Intel® Q670E Platform Controller Hub
Graphics	Integrated Intel® UHD Graphics 770 (32EU)/ 730 (24EU)
Memory	Up to 128GB DDR5 4800 (two SODIMM slots)
AMT	Supports Intel vPro/ AMT 16.0
TPM	Supports dTPM 2.0
I/O Interface	

Ethernet port	**Nuvo-9002DE**: 1x 2.5GbE by I226-IT and 1GbE by I219 with screw-lock **Nuvo-9006DE:** 5x 2.5GbE by I226-IT and 1x GbE by I219 with screw-lock
PoE+	Optional IEEE 802.3at PoE+ PSE for Port 3 ~ Port 6 (100 W total power budget)
USB	1x USB 3.2 Gen2x2 (20 Gbps) port in type-C connector with screw-lock 4x USB 3.2 Gen2x1 (10 Gbps) ports in type-A connectors 2x USB 3.2 Gen 1x1 (5 Gbps) ports in type-A connectors 2x USB 2.0 ports
Video Port	1x VGA connector, supporting 1920 x 1200 resolution 1x DVI-D connector, supporting 1920 x 1200 resolution 1x DisplayPort connector, supporting 4096 x 2304 resolution
Serial Port	2x software-programmable RS-232/ 422/ 485 ports (COM1/ COM2) 2x RS-232 ports (COM3/ COM4)
Audio	1x 3.5 mm jack for mic-in and speaker-out
Storage Interface	
SATA HDD	2x internal SATA ports for 2.5” HDD/ SSD (up to 15mm thickness), supporting RAID 0/1
M.2 NVMe	1x M.2 2280 M key NVMe socket (PCIe Gen4 x4) for NVMe SSD
Internal Expansion Bus	
PCI Slot	2x PCIe x16 slots@Gen3, 8-lanes PCIe signals in Cassette module
Mini PCI-E	1x full-size mini PCI Express socket
M.2	1x M.2 2242/ 3052 B key socket with SIM slot for M.2 5G/ 4G module
Expandable I/O	1x MezIO® expansion port for Neousys MezIO® modules
Power Supply	
DC Input	1x 3-pin pluggable terminal block for 8~48VDC DC input
Remote Ctrl. &LED Output	1x 3-pin pluggable terminal block for remote control and PWR LED output
Maximum Power Consumption	With i7-12700 (65W mode): 141.4W (Max.) @ 24V With i7-12700 (65W mode): 146.4W (Max.) @ 48V With i7-12700TE (35W mode): 106.6W (Max.) @ 24V With i7-12700TE (35W mode): 111.8W (Max.) @ 48V With i5-12400 (35W mode): 105.1W (Max.) @ 24V With i5-12400 (35W mode): 110.9W (Max.) @ 48V With i5-12400 (65W mode): 120.5W (Max.) @ 24V With i5-12400 (65W mode): 126.2W (Max.) @ 48V
Mechanical	
Dimension	240 mm (W) x 225 mm (D) x 110.5 mm (H)

Weight	4.4Kg (approx.)
Mounting	Wall-mounting (standard) or DIN-rail mounting (optional)
Environmental	
Operating Temperature	**With 35W CPU** -25°C to 70°C * **With 45W CPU** -25°C to 60°C * **With 65W CPU** -25°C to 70°C */ ** (configured as 35W TDP) -25°C to 50°C */ ** (configured as 65W TDP)
Storage Temperature	-40°C to 85°C
Humidity	10% to 90%, non-condensing
Vibration	MIL-STD-810H, Method 514.8, Category 4
Shock	MIL-STD-810H, Method 516.8, Procedure I
EMC	CE/ FCC Class A, according to EN 55032 & EN 55035

** For sub-zero operating temperature, a wide temperature HDD or Solid State Disk (SSD) is required.*

*** For CPU operating at 65W mode, the highest operating temperature shall be limited to 50°C and thermal throttling may occur when sustained full-loading applied. Users can configure CPU power in BIOS to allow higher operating temperature.*

1.1.6 Nuvo-9000DE-UL Series Specifications

System Core	
Processor	Supporting Intel® Core™ processor (Series 2) with P-cores (LGA1700 socket, 65W/ 45W TDP) - Intel® Core™ 9 273PE/ 273PTE - Intel® Core™ 7 253PE/ 253PTE - Intel® Core™ 5 223PE/ 223PTE Supporting Intel® Core™ processor (Series 2) (LGA1700 socket, 65W/ 45W TDP) - Intel® Core™ 7 251E/ 251TE - Intel® Core™ 5 221E/ 221TE - Intel® Core™ 3 201E/ 201TE Supports Intel® 14th-Gen Core™ CPU (LGA1700 socket, 65W/ 35W TDP) - Intel® Core™ i9-14900/ i9-14900T - Intel® Core™ i7-14700/ i7-14700T - Intel® Core™ i5-14500/ i5-14400/ i5-14500T - Intel® Core™ i3-14100/ i3-14100T Supports Intel® 13th-Gen Core™ CPU (LGA1700 socket, 65W/ 35W TDP) - Intel® Core™ i9-13900E/ i9-13900TE - Intel® Core™ i7-13700E/ i7-13700TE - Intel® Core™ i5-13500E/ i5-13400E/ i5-13500TE - Intel® Core™ i3-13100E/ i3-13100TE Supports Intel® 12th-Gen Core™ CPU (LGA1700 socket, 35W/ 65W TDP) - Intel® Core™ i9-12900E/ i9-12900TE - Intel® Core™ i7-12700E/ i7-12700TE - Intel® Core™ i5-12500E/ i5-12500TE - Intel® Core™ i3-12100E/ i3-12100TE - Intel® Pentium® G7400E/ G7400TE - Intel® Celeron® G6900E/ G6900TE
Chipset	Intel® Q670E Platform Controller Hub
Graphics	Integrated Intel® UHD Graphics 770 (32EU)/ 730 (24EU)
Memory	Up to 64GB DDR5 4800 (two SODIMM slots)
AMT	Supports Intel vPro/ AMT 16.0
TPM	Supports dTPM 2.0
I/O Interface	
Ethernet port	**Nuvo-9002DE(-UL)**: 1x 2.5GbE by I226-IT and 1GbE by I219 with screw-lock

	Nuvo-9006DE(-UL): 5x 2.5GbE by I226-IT and 1x GbE by I219 with screw-lock
PoE+	Optional IEEE 802.3at PoE+ PSE for Port 3 ~ Port 6 (100 W total power budget)
USB	1x USB 3.2 Gen2x2 (20 Gbps) port in type-C connector with screw-lock 4x USB 3.2 Gen2x1 (10 Gbps) ports in type-A connectors 2x USB 3.2 Gen 1x1 (5 Gbps) ports in type-A connectors 2x USB 2.0 ports
Video Port	1x VGA connector, supporting 1920 x 1200 resolution 1x DVI-D connector, supporting 1920 x 1200 resolution 1x DisplayPort connector, supporting 4096 x 2304 resolution
Serial Port	2x software-programmable RS-232/ 422/ 485 ports (COM1/ COM2) 2x RS-232 ports (COM3/ COM4)
Audio	1x 3.5 mm jack for mic-in and speaker-out
Storage Interface	
SATA HDD	2x internal SATA ports for 2.5” HDD/ SSD (up to 15mm thickness), supporting RAID 0/1
M.2 NVMe	1x M.2 2280 M key NVMe socket (PCIe Gen4 x4) for NVMe SSD
Internal Expansion Bus	
PCI Slot	2x PCIe x16 slots@Gen3, 8-lanes PCIe signals in Cassette module
Mini PCI-E	1x full-size mini PCI Express socket
M.2	1x M.2 2242/ 3052 B key socket with SIM slot for M.2 5G/ 4G module
Expandable I/O	1x MezIO® expansion port for Neousys MezIO® modules
Power Supply	
DC Input	1x 3-pin pluggable terminal block for 24V DC input
Remote Ctrl. &LED Output	1x 3-pin pluggable terminal block for remote control and PWR LED output
Maximum Power Consumption	With i7-12700 (65W mode): 141.4W (Max.) @ 24V With i7-12700TE (35W mode): 106.6W (Max.) @ 24V With i5-12400 (35W mode): 105.1W (Max.) @ 24V With i5-12400 (65W mode): 120.5W (Max.) @ 24V
Mechanical	
Dimension	240 mm (W) x 225 mm (D) x 110.5 mm (H)
Weight	4.4Kg (approx.)
Mounting	Wall-mounting (standard) or DIN-rail mounting (optional)
Environmental	
Operating	**With 35W CPU**

Temperature	-25°C to 70°C * **With 45W CPU** -25°C to 60°C * **With 65W CPU** -25°C to 70°C */ ** (configured as 35W TDP) -25°C to 50°C */ ** (configured as 65W TDP)
Storage Temperature	-40°C to 85°C
Humidity	10% to 90%, non-condensing
Vibration	MIL-STD-810H, Method 514.8, Category 4
Shock	MIL-STD-810H, Method 516.8, Procedure I
EMC	CE/ FCC Class A, according to EN 55032 & EN 55035

** For sub-zero operating temperature, a wide temperature HDD or Solid State Disk (SSD) is required.*

*** For CPU operating at 65W mode, the highest operating temperature shall be limited to 50°C and thermal throttling may occur when sustained full-loading applied. Users can configure CPU power in BIOS to allow higher operating temperature.*

1.1.7 Nuvo-9000LP Specifications

Applicable systems: Nuvo-9002LP/ 9006LP/ 9006LP-PoE

System Core	
Processor	Supporting Intel® Core™ processor (Series 2) with P-cores (LGA1700 socket, 65W/ 45W TDP) - Intel® Core™ 9 273PE/ 273PTE - Intel® Core™ 7 253PE/ 253PTE - Intel® Core™ 5 223PE/ 223PTE Supporting Intel® Core™ processor (Series 2) (LGA1700 socket, 65W/ 45W TDP) - Intel® Core™ 7 251E/ 251TE - Intel® Core™ 5 221E/ 221TE - Intel® Core™ 3 201E/ 201TE Supports Intel® 14th-Gen Core™ CPU (LGA1700 socket, 65W/ 35W TDP) - Intel® Core™ i9-14900/ i9-14900T - Intel® Core™ i7-14700/ i7-14700T - Intel® Core™ i5-14500/ i5-14400/ i5-14500T - Intel® Core™ i3-14100/ i3-14100T Supports Intel® 13th-Gen Core™ CPU (LGA1700 socket, 65W/ 35W TDP) - Intel® Core™ i9-13900E/ i9-13900TE - Intel® Core™ i7-13700E/ i7-13700TE - Intel® Core™ i5-13500E/ i5-13400E/ i5-13500TE - Intel® Core™ i3-13100E/ i3-13100TE Supports Intel® 12th-Gen Core™ CPU (LGA1700 socket, 35W/ 65W TDP) - Intel® Core™ i9-12900E/ i9-12900TE - Intel® Core™ i7-12700E/ i7-12700TE - Intel® Core™ i5-12500E/ i5-12500TE - Intel® Core™ i3-12100E/ i3-12100TE - Intel® Pentium® G7400E/ G7400TE - Intel® Celeron® G6900E/ G6900TE
Chipset	Intel® Q670E Platform Controller Hub
Graphics	Integrated Intel® UHD Graphics 770 (32EU)/ 730 (24EU)
Memory	Up to 128GB DDR5 4800 (two SODIMM slots)
AMT	Supports Intel vPro/ AMT 16.0
TPM	Supports dTPM 2.0
I/O Interface	

Ethernet port	**Nuvo-9002LP**: 1x 2.5GbE by I226-IT and 1GbE by I219 with screw-lock **Nuvo-9006LP:** 5x 2.5GbE by I226-IT and 1x GbE by I219 with screw-lock
PoE+	Optional IEEE 802.3at PoE+ PSE for Port 3 ~ Port 6 (100 W total power budget)
USB	1x USB 3.2 Gen2x2 (20 Gbps) port in type-C connector with screw-lock 4x USB 3.2 Gen2x1 (10 Gbps) ports in type-A connectors 2x USB 3.2 Gen 1x1 (5 Gbps) ports in type-A connectors 2x USB 2.0 ports
Video Port	1x VGA connector, supporting 1920 x 1200 resolution 1x DVI-D connector, supporting 1920 x 1200 resolution 1x DisplayPort connector, supporting 4096 x 2304 resolution
Serial Port	2x software-programmable RS-232/ 422/ 485 ports (COM1/ COM2) 2x RS-232 ports (COM3/ COM4)
Audio	1x 3.5 mm jack for mic-in and speaker-out
Storage Interface	
SATA HDD	1x internal SATA ports for 2.5” HDD/ SSD (up to 15mm thickness), and 1x external 2.5” HDD/ SSD tray (up to 7mm thickness), supporting RAID 0/1
M.2 NVMe	1x M.2 2280 M key NVMe socket (PCIe Gen4 x4) for NVMe SSD
Internal Expansion Bus	
Mini PCI-E	1x full-size mini PCI Express socket
M.2	1x M.2 2242/ 3052 B key socket with SIM slot for M.2 5G/ 4G module
Expandable I/O	1x MezIO® expansion port for Neousys MezIO® modules
Power Supply	
DC Input	1x 3-pin pluggable terminal block for 8~48VDC DC input
Remote Ctrl. &LED Output	1x 3-pin pluggable terminal block for remote control and PWR LED output
Maximum Power Consumption	With i7-12700 (65W mode): 141.4W (Max.) @ 24V With i7-12700 (65W mode): 146.4W (Max.) @ 48V With i7-12700TE (35W mode): 106.6W (Max.) @ 24V With i7-12700TE (35W mode): 111.8W (Max.) @ 48V With i5-12400 (35W mode): 105.1W (Max.) @ 24V With i5-12400 (35W mode): 110.9W (Max.) @ 48V With i5-12400 (65W mode): 120.5W (Max.) @ 24V With i5-12400 (65W mode): 126.2W (Max.) @ 48V
Mechanical	
Dimension	240 mm (W) x 225 mm (D) x 79 mm (H)
Weight	4.4Kg (approx.)

Mounting	Wall-mounting (standard) or DIN-rail mounting (optional)
Environmental	
Operating Temperature	**With 35W CPU** -25°C to 70°C * **With 45W CPU** -25°C to 60°C * **With 65W CPU** -25°C to 70°C */ ** (configured as 35W TDP) -25°C to 50°C */ ** (configured as 65W TDP)
Storage Temperature	-40°C to 85°C
Humidity	10% to 90%, non-condensing
Vibration	MIL-STD-810H, Method 514.8, Category 4
Shock	MIL-STD-810H, Method 516.8, Procedure I
EMC	CE/ FCC Class A, according to EN 55032 & EN 55035

** For sub-zero operating temperature, a wide temperature HDD or Solid State Disk (SSD) is required.*

*** For CPU operating at 65W mode, the highest operating temperature shall be limited to 50°C and thermal throttling may occur when sustained full-loading applied. Users can configure CPU power in BIOS to allow higher operating temperature.*

1.1.8 Nuvo-9000LP-UL Series Specifications

System Core	
Processor	Supporting Intel® Core™ processor (Series 2) with P-cores (LGA1700 socket, 65W/ 45W TDP) - Intel® Core™ 9 273PE/ 273PTE - Intel® Core™ 7 253PE/ 253PTE - Intel® Core™ 5 223PE/ 223PTE Supporting Intel® Core™ processor (Series 2) (LGA1700 socket, 65W/ 45W TDP) - Intel® Core™ 7 251E/ 251TE - Intel® Core™ 5 221E/ 221TE - Intel® Core™ 3 201E/ 201TE Supports Intel® 14th-Gen Core™ CPU (LGA1700 socket, 65W/ 35W TDP) - Intel® Core™ i9-14900/ i9-14900T - Intel® Core™ i7-14700/ i7-14700T - Intel® Core™ i5-14500/ i5-14400/ i5-14500T - Intel® Core™ i3-14100/ i3-14100T Supports Intel® 13th-Gen Core™ CPU (LGA1700 socket, 65W/ 35W TDP) - Intel® Core™ i9-13900E/ i9-13900TE - Intel® Core™ i7-13700E/ i7-13700TE - Intel® Core™ i5-13500E/ i5-13400E/ i5-13500TE - Intel® Core™ i3-13100E/ i3-13100TE Supports Intel® 12th-Gen Core™ CPU (LGA1700 socket, 35W/ 65W TDP) - Intel® Core™ i9-12900E/ i9-12900TE - Intel® Core™ i7-12700E/ i7-12700TE - Intel® Core™ i5-12500E/ i5-12500TE - Intel® Core™ i3-12100E/ i3-12100TE - Intel® Pentium® G7400E/ G7400TE - Intel® Celeron® G6900E/ G6900TE
Chipset	Intel® Q670E Platform Controller Hub
Graphics	Integrated Intel® UHD Graphics 770 (32EU)/ 730 (24EU)
Memory	Up to 64GB DDR5 4800 (two SODIMM slots)
AMT	Supports Intel vPro/ AMT 16.0
TPM	Supports dTPM 2.0
I/O Interface	
Ethernet port	**Nuvo-9002LP(-UL)**: 1x 2.5GbE by I226-IT and 1GbE by I219 with

	screw-lock **Nuvo-9006LP(-UL):** 5x 2.5GbE by I226-IT and 1x GbE by I219 with screw-lock
PoE+	Optional IEEE 802.3at PoE+ PSE for Port 3 ~ Port 6 (100 W total power budget)
USB	1x USB 3.2 Gen2x2 (20 Gbps) port in type-C connector with screw-lock 4x USB 3.2 Gen2x1 (10 Gbps) ports in type-A connectors 2x USB 3.2 Gen 1x1 (5 Gbps) ports in type-A connectors 2x USB 2.0 ports
Video Port	1x VGA connector, supporting 1920 x 1200 resolution 1x DVI-D connector, supporting 1920 x 1200 resolution 1x DisplayPort connector, supporting 4096 x 2304 resolution
Serial Port	2x software-programmable RS-232/ 422/ 485 ports (COM1/ COM2) 2x RS-232 ports (COM3/ COM4)
Audio	1x 3.5 mm jack for mic-in and speaker-out
Storage Interface	
SATA HDD	1x internal SATA ports for 2.5” HDD/ SSD (up to 15mm thickness), and 1x external 2.5” HDD/ SSD tray (up to 7mm thickness), supporting RAID 0/1
M.2 NVMe	1x M.2 2280 M key NVMe socket (PCIe Gen4 x4) for NVMe SSD
Internal Expansion Bus	
Mini PCI-E	1x full-size mini PCI Express socket
M.2	1x M.2 2242/ 3052 B key socket with SIM slot for M.2 5G/ 4G module
Expandable I/O	1x MezIO® expansion port for Neousys MezIO® modules
Power Supply	
DC Input	1x 3-pin pluggable terminal block for 24V DC input
Remote Ctrl. &LED Output	1x 3-pin pluggable terminal block for remote control and PWR LED output
Maximum Power Consumption	With i7-12700 (65W mode): 141.4W (Max.) @ 24V With i7-12700TE (35W mode): 106.6W (Max.) @ 24V With i5-12400 (35W mode): 105.1W (Max.) @ 24V With i5-12400 (65W mode): 120.5W (Max.) @ 24V
Mechanical	
Dimension	240 mm (W) x 225 mm (D) x 79 mm (H)
Weight	4.4Kg (approx.)
Mounting	Wall-mounting (standard) or DIN-rail mounting (optional)
Environmental	
Operating	**With 35W CPU**

Temperature	-25°C to 70°C * **With 45W CPU** -25°C to 60°C * **With 65W CPU** -25°C to 70°C */ ** (configured as 35W TDP) -25°C to 50°C */ ** (configured as 65W TDP)
Storage Temperature	-40°C to 85°C
Humidity	10% to90%, non-condensing
Vibration	MIL-STD-810H, Method 514.8, Category 4
Shock	MIL-STD-810H, Method 516.8, Procedure I
EMC	CE/ FCC Class A, according to EN 55032 & EN 55035

** For sub-zero operating temperature, a wide temperature HDD or Solid State Disk (SSD) is required.*

*** For CPU operating at 65W mode, the highest operating temperature shall be limited to 50°C and thermal throttling may occur when sustained full-loading applied. Users can configure CPU power in BIOS to allow higher operating temperature.*

1.2 Nuvo-9000E/ P Dimension

NOTE

All measurements are in millimeters (mm).

Applicable to Nuvo-9002E/ 9006E/ 9006E-PoE, Nuvo-9002P/ 9006P/ 9006P-PoE, and respective UL series systems.

For Nuvo-9000-UL series, the input voltage is 24V.

The numbers “2.5” represents the height of the rubber stands at 2.5mm.

1.2.1 Nuvo-9000E/ P Front Panel View

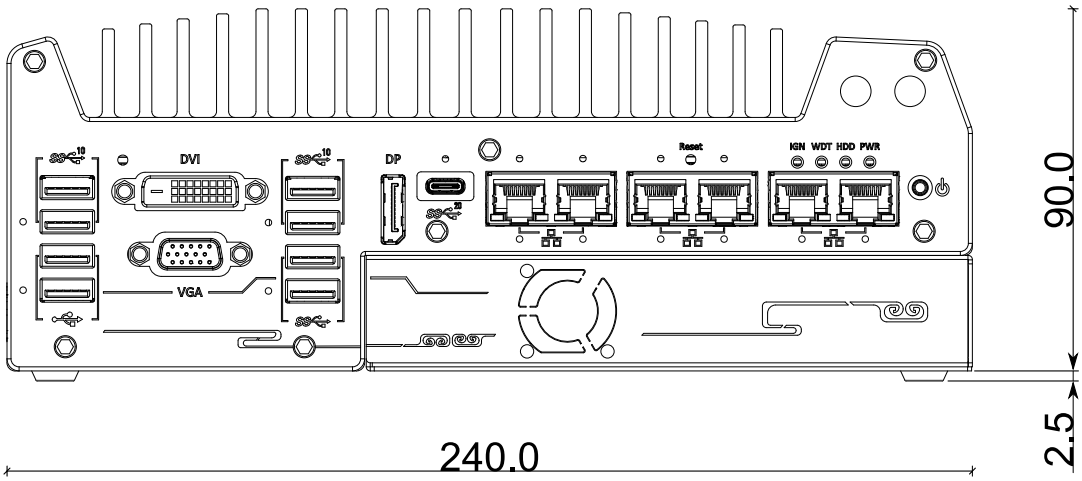

1.2.2 Nuvo-9000E/ P Rear Panel View

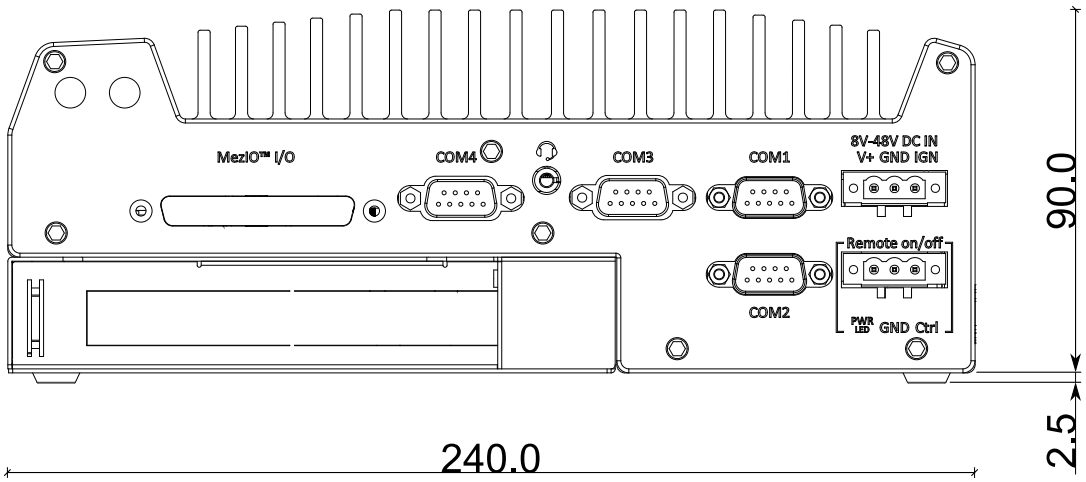

1.2.3 Nuvo-9000E/ P Top View

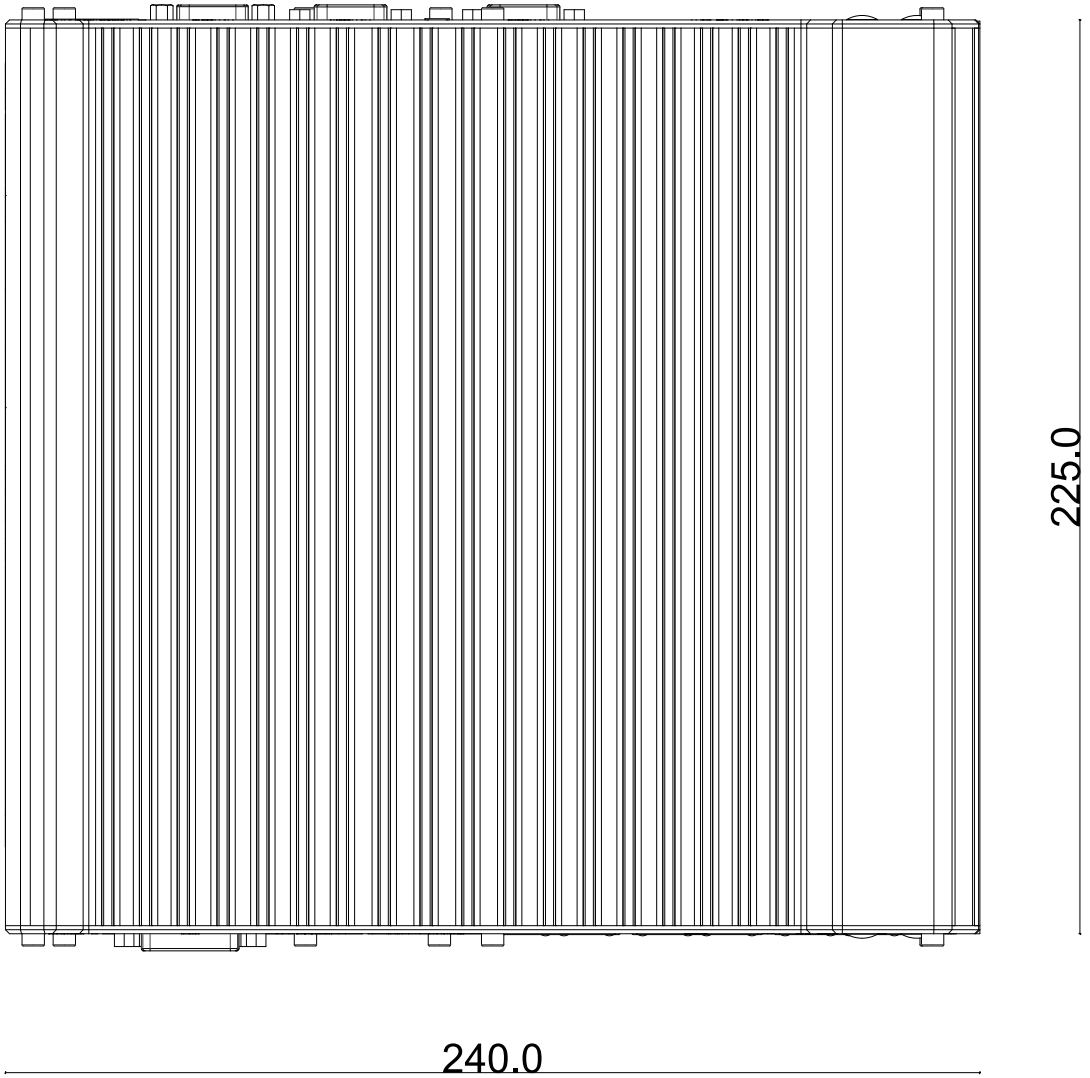

1.2.4 Nuvo-9000E/ P Bottom View

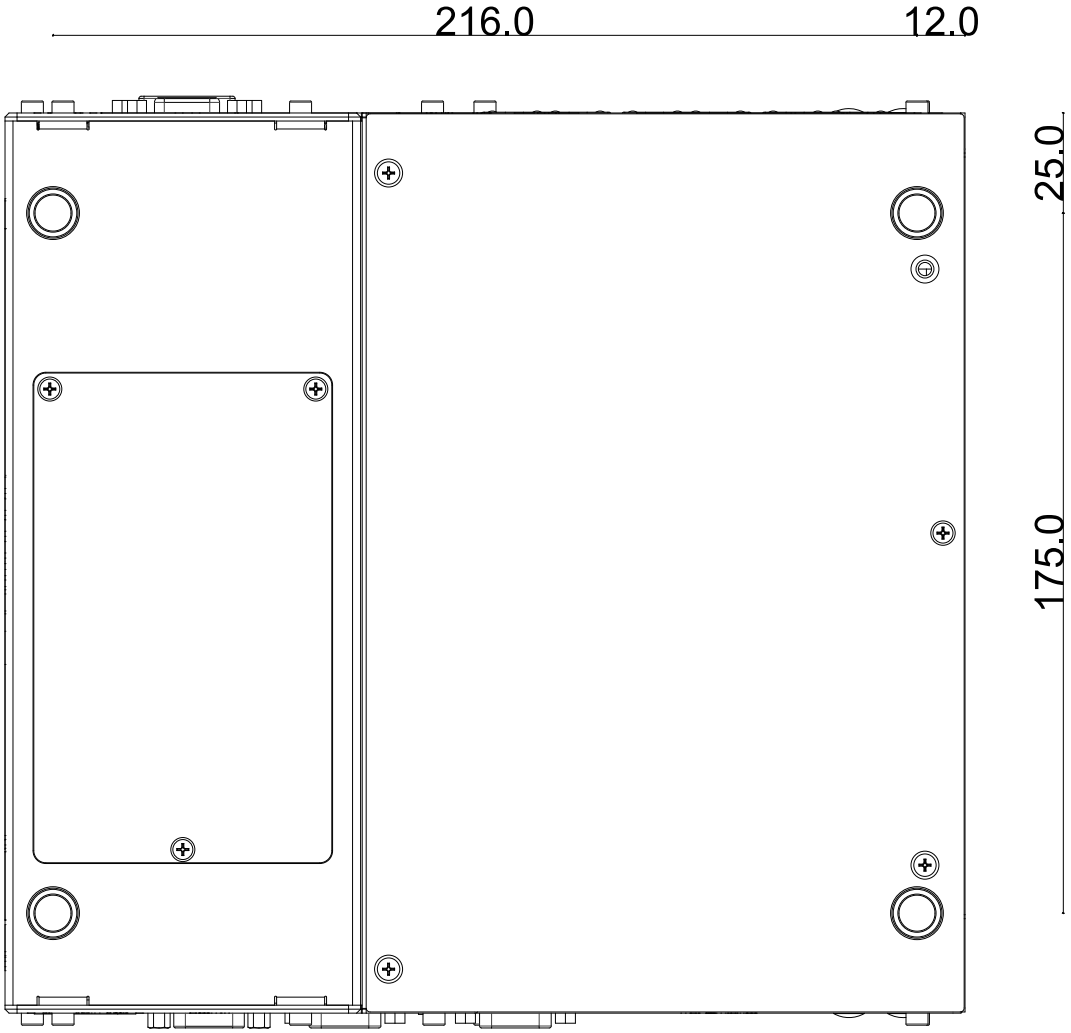

1.3 Nuvo-9000DE Dimension

NOTE

All measurements are in millimeters (mm).

Applicable to Nuvo-9002DE/ 9006DE/ 9006DE-PoE, and respective UL systems.

For Nuvo-9000-UL series, the input voltage is 24V.

The numbers “2.5” represents the height of the rubber stands at 2.5mm.

1.3.1 Nuvo-9000DE Front Panel View

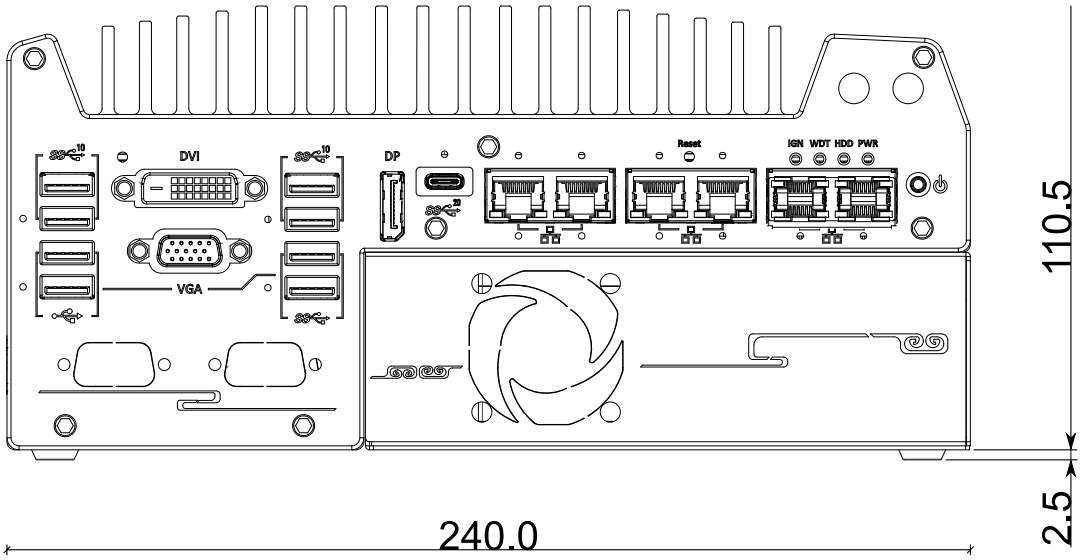

1.3.2 Nuvo-9000DE Rear Panel view

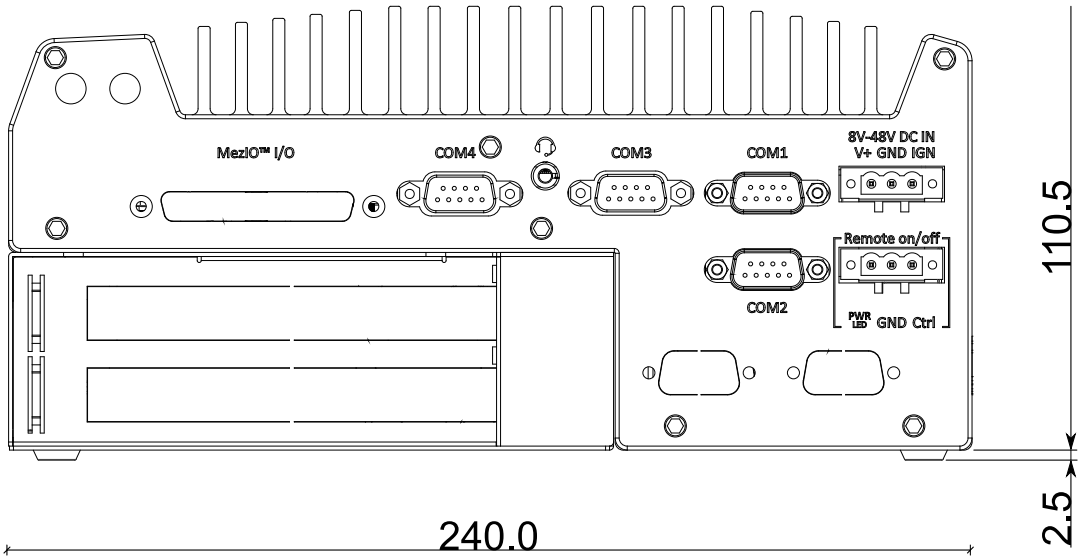

1.3.3 Nuvo-9000DE Top View

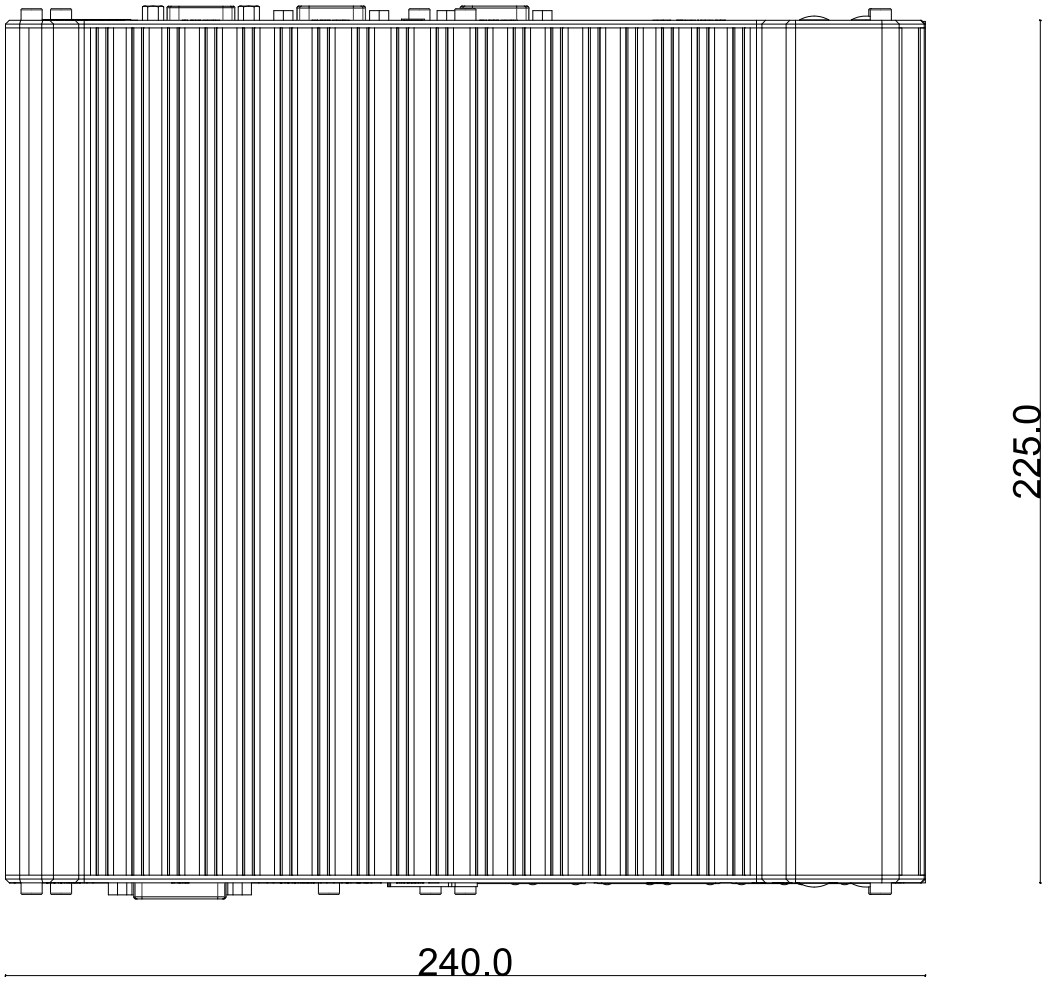

1.3.4 Nuvo-9000DE Bottom View

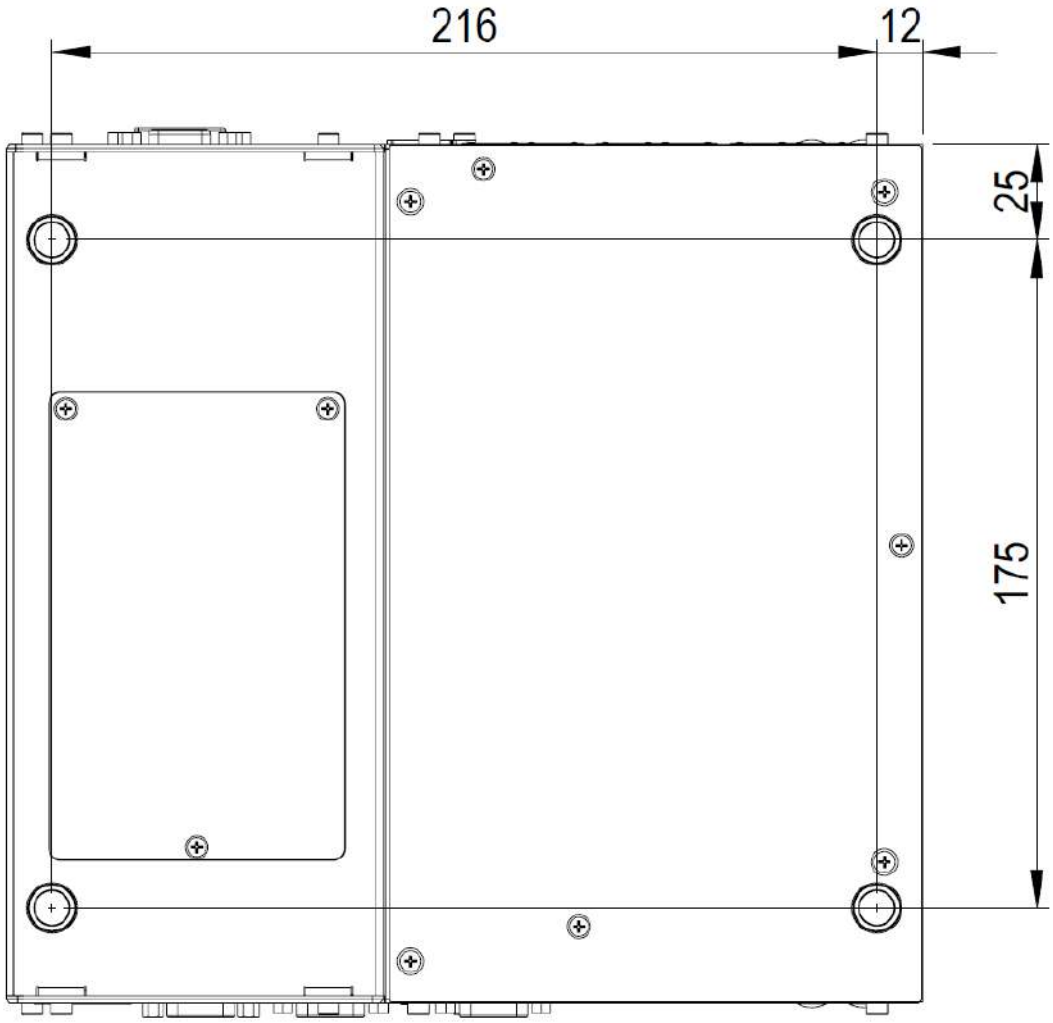

1.4 Nuvo-9000LP Dimension

NOTE

All measurements are in millimeters (mm).

Applicable to Nuvo-9002LP/ 9006LP/ 9006LP-PoE, and respective UL systems.

For Nuvo-9000-UL series, the input voltage is 24V.

The numbers “2.5” represents the height of the rubber stands at 2.5mm.

1.4.1 Nuvo-9000LP Front Panel View

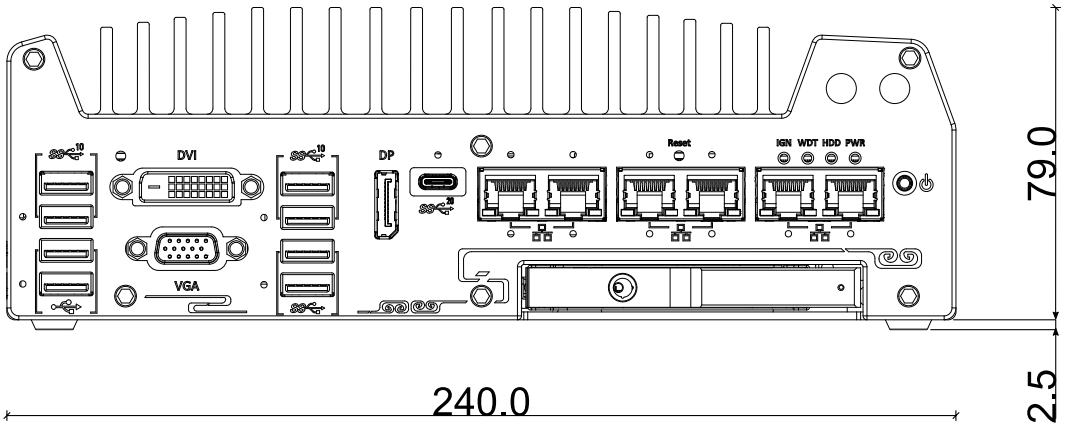

1.4.2 Nuvo-9000LP Rear Panel view

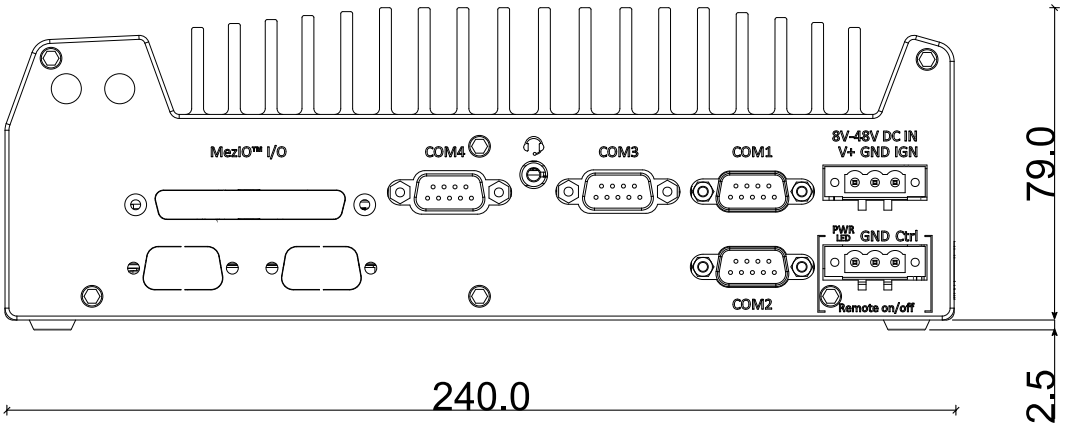

1.4.3 Nuvo-9000LP Top View

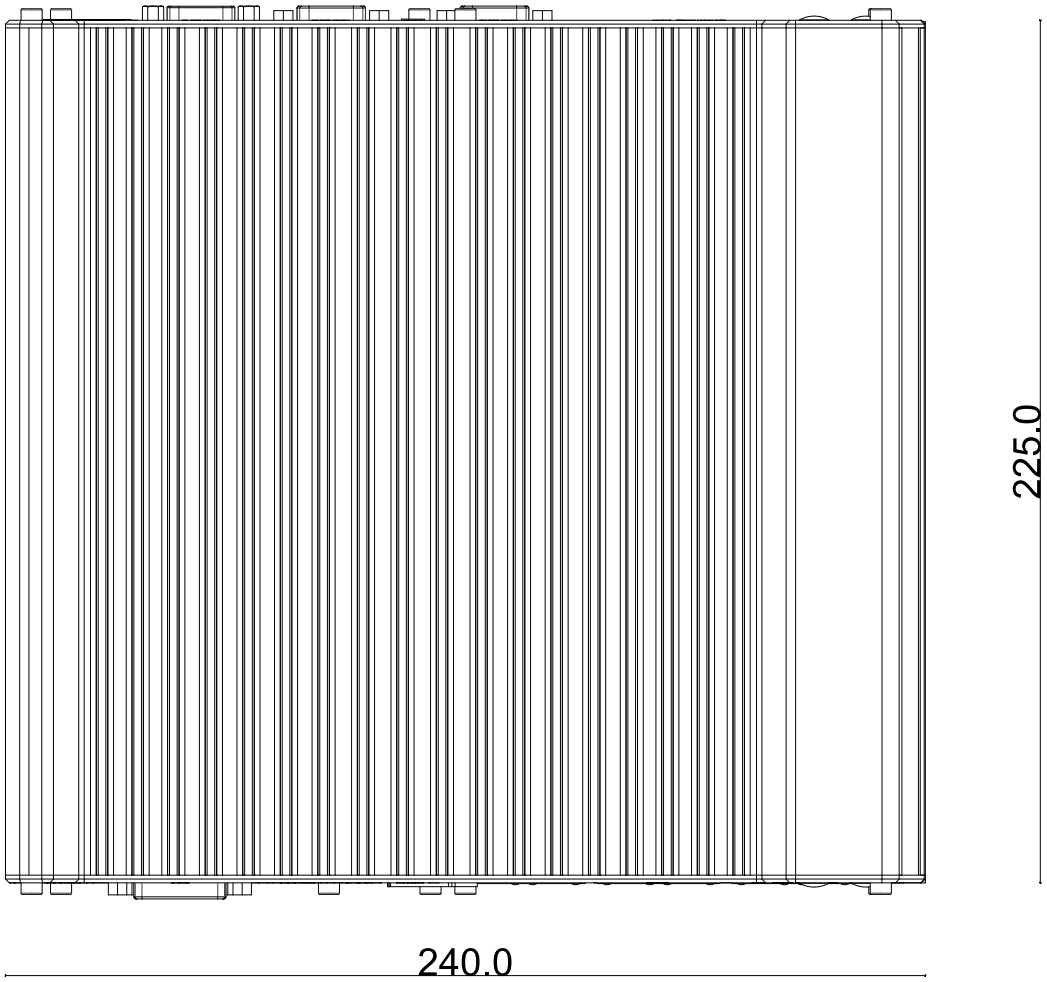

1.4.4 Nuvo-9000LP Bottom View

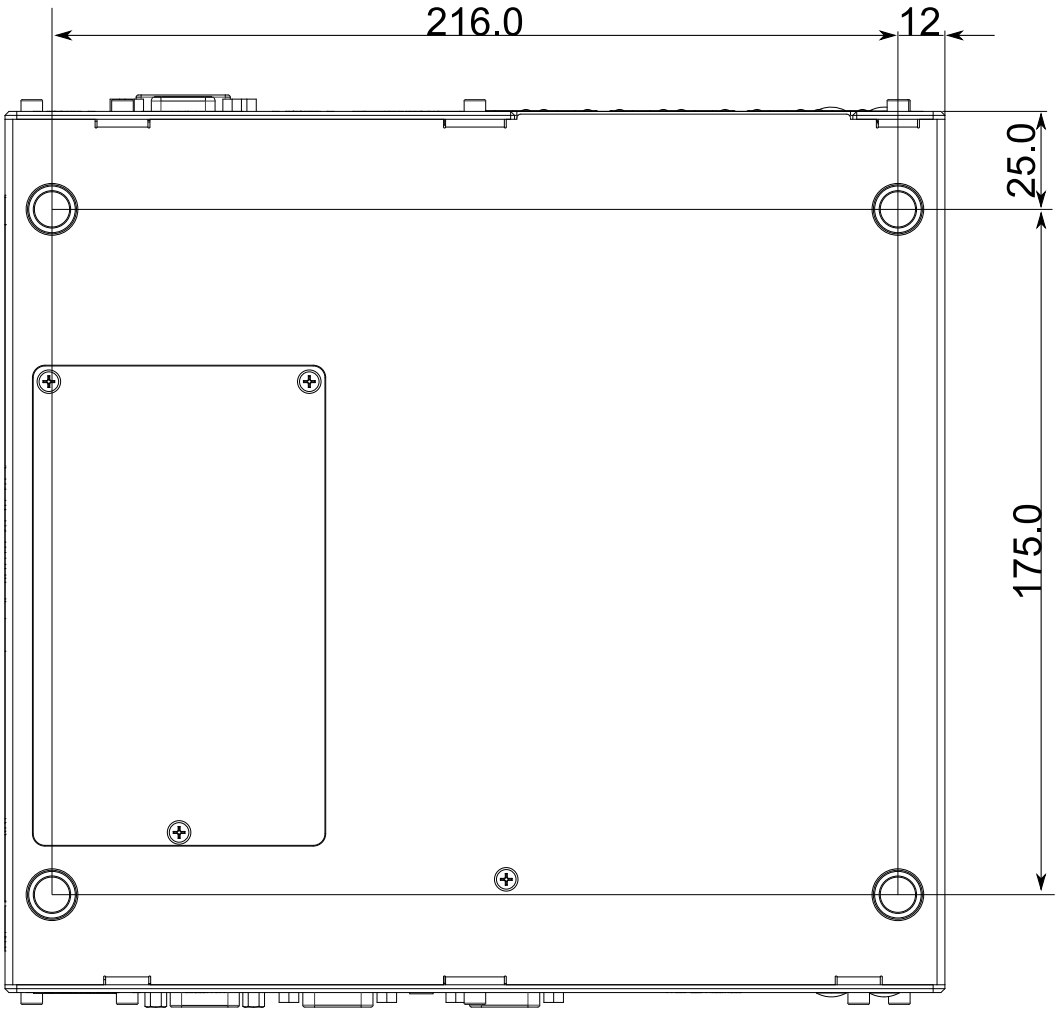

2 System Overview

Upon receiving and unpacking your Nuvo-9000 series system, please check immediately if the package contains all the items listed in the following table. If any item(s) are missing or damaged, please contact your local dealer or Neousys Technology.

2.1 Packing List

2.1.1 Nuvo-9000E/ P Series Packing List

System / Pack	Nuvo-9000E/P	Qty
1	Nuvo-9000E/P series system (If you ordered CPU/ RAM/ HDD, please verify these items)	1
2	Accessory box, which contains	
	● CPU bracket	1
	● Wall-mount bracket	2
	● Foot pad	4
	● 3-pin push-in power terminal block	2
	● HDD thermal pad for 2.5” HDD/SSD (if HDD is not installed)	1
	● Screw pack	1
	● Rubber spacer	4
	● High temperature warning label*	1

2.1.2 Nuvo-9000DE Series Packing List

System / Pack	Nuvo-9000DE	Qty
1	Nuvo-9000DE series system (If you ordered CPU/ RAM/ HDD, please verify these items)	1
2	Accessory box, which contains	
	● CPU bracket	1
	● Wall-mount bracket	2
	● Foot pad	4
	● 3-pin push-in power terminal block	2
	● HDD thermal pad for 2.5" HDD/SSD (if HDD is not installed)	1
	● Screw pack	1
	● Rubber spacer	4
	● Fan (40X40X10mm)	1
	● High temperature warning label*	1

2.1.3 Nuvo-9000LP Series Packing List

System / Pack	Nuvo-9000LP	Qty
1	Nuvo-9000LP series system (If you ordered CPU/ RAM/ HDD, please verify these items)	1
2	Accessory box, which contains	
	● CPU bracket	1
	● Wall-mount bracket	2
	● Foot pad	4
	● 3-pin push-in power terminal block	2
	● HDD thermal pad for 2.5” HDD/SSD (if HDD is not installed)	1
	● Screw pack	1
	● High temperature warning label*	1

* A high-temperature warning sticker is provided for users to place on surfaces that may become hot during operation.

2.2 Front Panel I/O

NOTE

For demonstration purposes, Nuvo-9000E/ P will be used in most illustrations. A dedicated illustration will be shown if the component is significantly different.

The Nuvo-9000 series systems' front panel features the following external I/O connections.

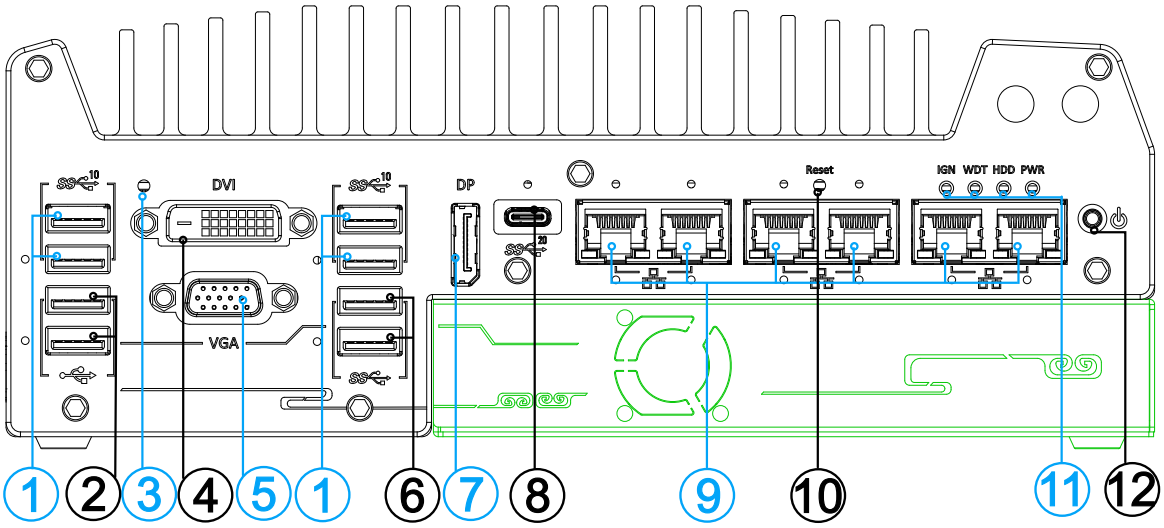

Nuvo-9000DE/ E/ P series

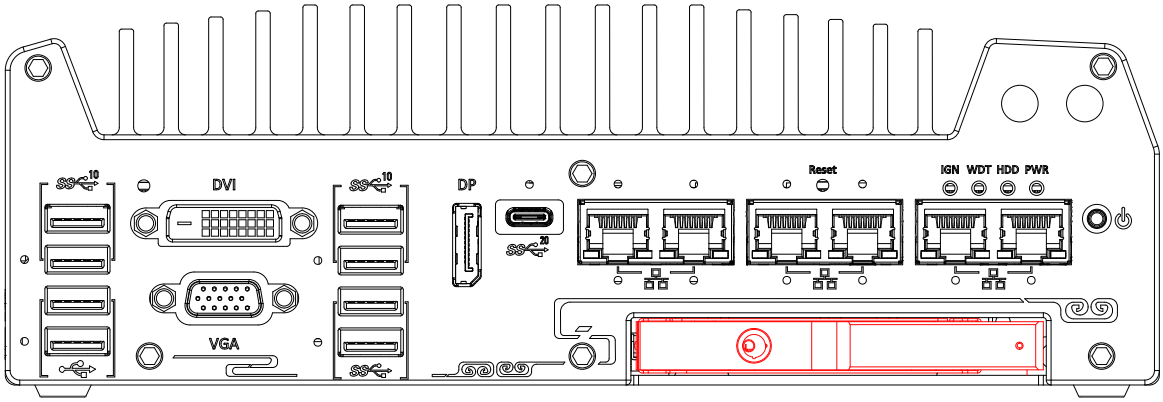

Nuvo-9000LP

No.	Item	Description
1	USB3.2 Gen2x1 port	USB3.1 Gen 2 port (SuperSpeed+) offers up to 10Gbps, twice the bandwidth over existing SuperSpeed USB3.1 Gen. 1 connection. It is also backwards compatible with USB3.0 and USB2.0
2	USB2.0 port	The USB 2.0 ports offer up to 480Mbit/s bandwidth and are backward compatible with USB 1.1/ 1.0.
3	CMOS	Use this button to manually to reset the CMOS to load default BIOS

	reset button	
4	DVI port	DVI-D output supports resolution up to 1920 x 1200@60Hz and is compatible with other digital connections via an adapter.
5	VGA port	VGA output supports resolution up to 1920 x 1200@60Hz
6	USB3.1 Gen1x1 port	USB3.1 Gen 1 offers up to 5Gbps of data-throughput performance
7	DisplayPort	Support display resolutions up to 4096 x 2304 @ 60Hz. Compatible with HDMI/ DVI via respective adapter/ cable (resolution may vary).
8	USB3.2 Gen2x2 Type-C port	The USB 3.2 Gen2x2 type-C port offers up to 20Gbps of bandwidth connectivity for fast data exchange with external devices
9	Ethernet & PoE+ port	1x 2.5GbE by I226-IT and 1x GbE by I219 (Nuvo-9002E/ P/ DE) with screw-lock 5x 2.5GbE by I226-IT and 1x GbE by I219 (Nuvo-9006E/ P/ DE) with screw-lock
10	Reset button	Use this button to manually reset the system.
11	LED indicators	From left to right, the LEDs are IGN (ignition control), WDT (watchdog timer), HDD (hard disk drive) and PWR (system power).
12	Power button	Use this button to turn on or shutdown the system.
Area in Green	Cassette module	The cassette module offers a separate compartment to manage thermal conditions and reduce installation complications of an add-on card. **Nuvo-9002E/ 9006E series**: 1x PCIe x16 slot@Gen3, 8-lanes PCIe signal **Nuvo-9002DE/ 9006DE series**: 2x PCIe x16 slot@Gen3, 8-lanes PCIe signal **Nuvo-9002P/ 9006P series**: 1x 32bit/ 33MHz PCI slot
Area in Red	2.5" HDD/SSD Tray	The HDD expansion tray offer hot-swap ability (Nuvo-9000LP series systems only).

2.2.1 USB3.2 Gen2x1 Port

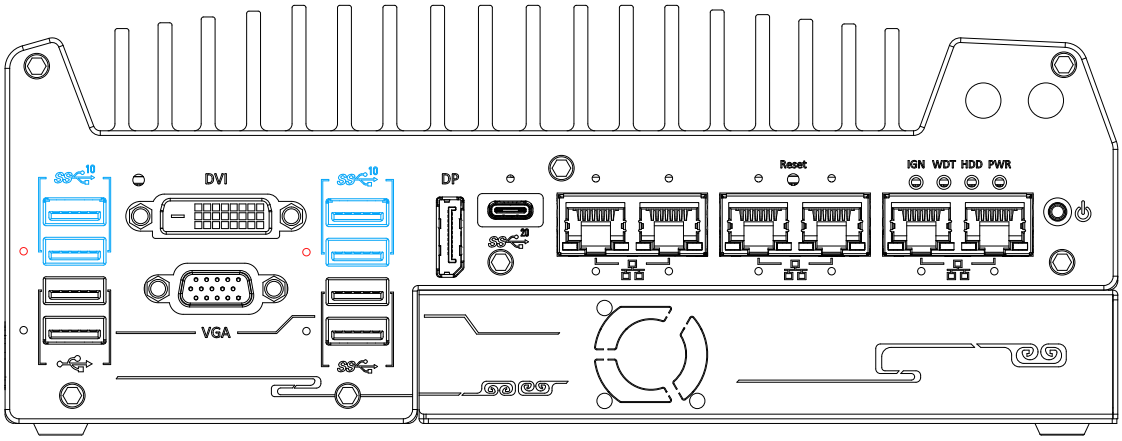

The system's USB 3.2 Gen2x1 ports (10Gbps) are implemented via native xHCI (eXtensible Host Controller Interface) controller and are backward compatible with USB3.2 Gen.1 USB 2.0, USB 1.1 and USB 1.0 devices. UFEI USB is also supported so you can use USB keyboard/ mouse in UEFI shell environment. Indicated in **red** are screw-lock holes for the corresponding USB port.

xHCI driver is supported natively in Windows 10, therefore you do not need to install the xHCI driver prior to utilizing USB functions.

2.2.2 USB2.0 Port

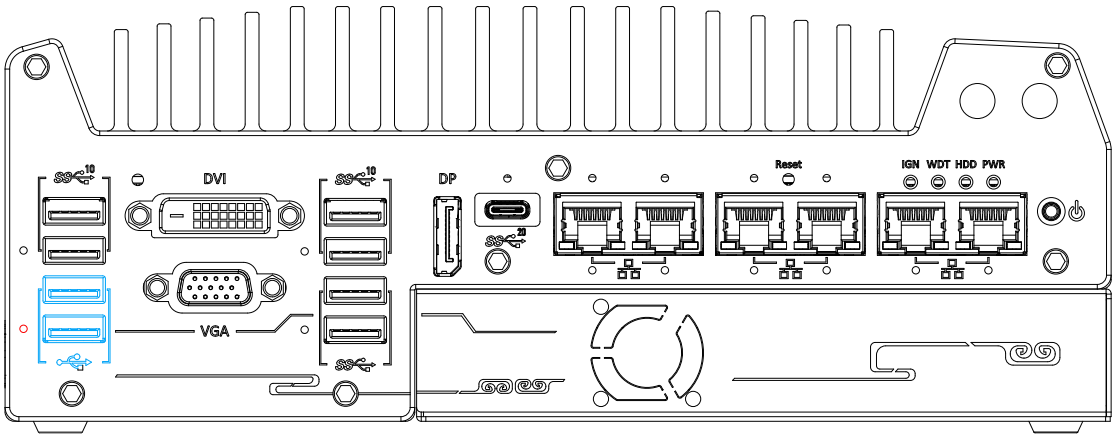

The USB2.0 ports are implemented via native xHCI (eXtensible Host Controller Interface) and are backward compatible with USB 1.1 and USB 1.0 devices. UEFI USB support is also provided so you can use USB keyboard/ mouse in UEFI shell environment. Indicated in **red** is a screw-lock hole for the corresponding USB port.

xHCI driver is supported natively in Windows 10, therefore you do not need to install xHCI driver to utilize USB functions.

2.2.3 CMOS Reset Button

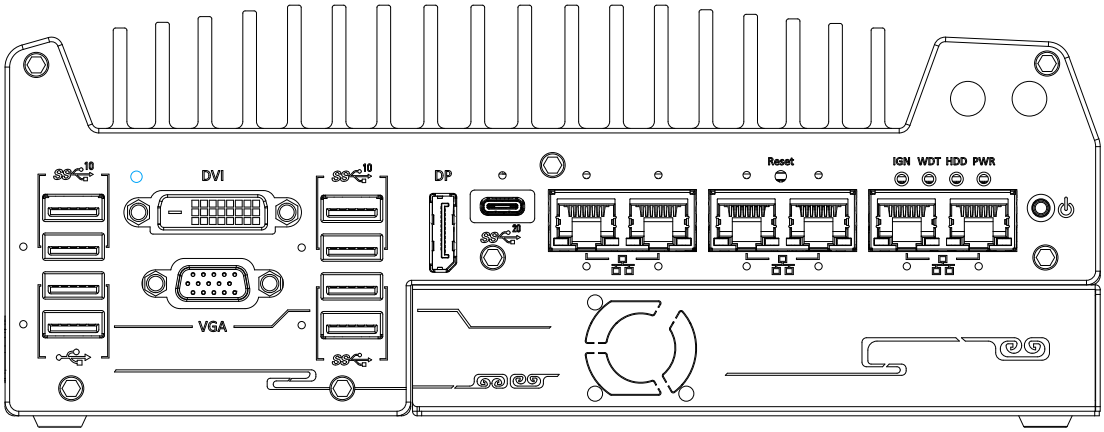

The CMOS Reset button is used to manually reset the motherboard BIOS in case of system halt or malfunction. To avoid unexpected operation, it is purposely placed behind the panel. To reset, disconnect the DC power input, and use the tip of a pen to press and hold for at least 5 seconds to reset the BIOS.

NOTE

*You **MUST** disconnect the DC input from the system before resetting the CMOS.*

WARNING

Clearing the CMOS will reset all BIOS settings to default and may result in down time!

2.2.4 DVI Port

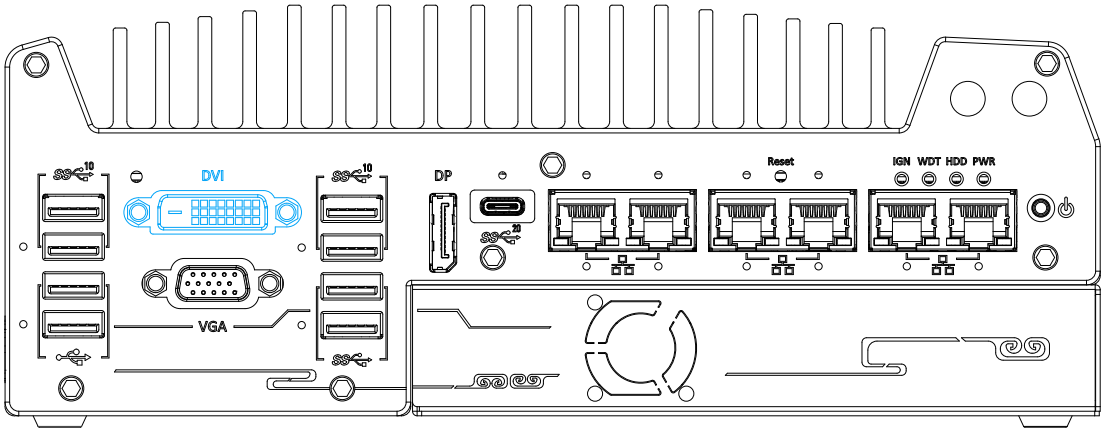

DVI-D transmits graphics data in digital format and therefore can deliver better image quality at high resolution. The DVI connector on the front panel can either output DVI signals or other digital signals (via an adapter/ cable) depending on the display device connected. It supports resolutions up to 1920x1200@60Hz.

The system supports triple independent display outputs by connecting display devices to VGA, DVI and DisplayPort connection. To support multiple display outputs and achieve best DVI output resolution in Windows, you need to install corresponding graphics driver. Please refer to section OS Support and Driver Installation for details.

2.2.5 VGA Port

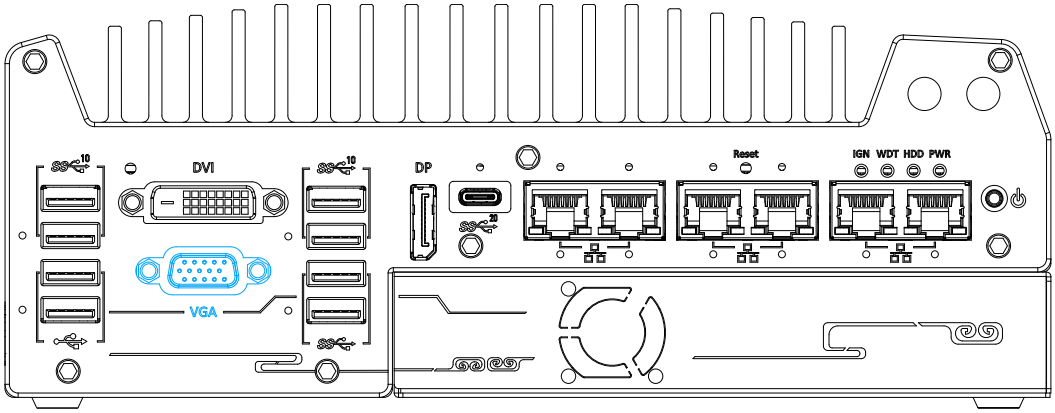

VGA connector is the most common video display connection. The VGA output supports up to 1920x1200@60Hz resolution.

The system supports triple independent display outputs by connecting display devices to VGA, DVI and DisplayPort connection. To support multiple display outputs and achieve best VGA output resolution in Windows, you need to install corresponding graphics drivers. Please refer to section OS Support and Driver Installation for details.

NOTE

Please make sure your VGA cable includes SDA and SCL (DDC clock and data) signals for correct communication with monitor to get resolution/timing information. A cable without SDA/ SCL can cause blank screen on your VGA monitor due to incorrect resolution/timing output.

2.2.6 USB3.2 Gen 1x1 Port

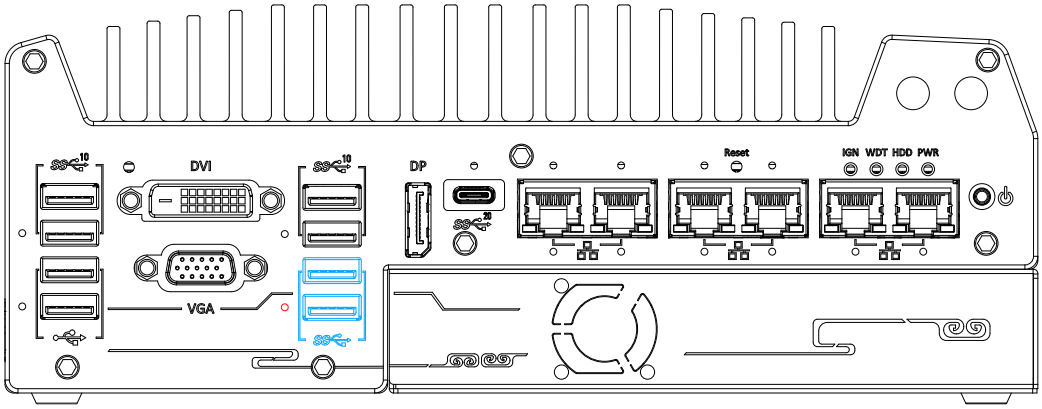

The system's USB 3.2 Gen1x1 ports (5Gbps) are implemented via native xHCI (eXtensible Host Controller Interface) controller and are backward compatible with USB 2.0, USB 1.1 and USB 1.0 devices. UEFI USB is also supported so you can use USB keyboard/mouse in UEFI shell environment. Indicated in **red** is a screw-lock hole for the corresponding USB port.

xHCI driver is supported natively in Windows 10, therefore you do not need to install the xHCI driver prior to utilizing USB functions.

2.2.7 DisplayPort

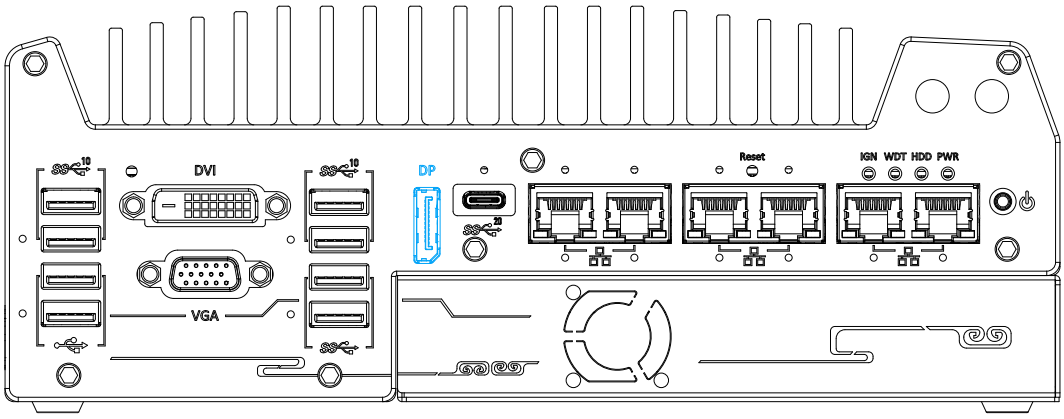

The system has a DisplayPort (DP) output which is a digital display interface that mainly connect video source and carry audio to a display device. When connecting a DP, it can deliver up to 4K UHD (4096 x 2304 @ 60Hz) in resolution. The system is designed to support passive DP adapter/ cable. You can connect to other display devices using DP-to-HDMI cable or DP-to-DVI cable.

DP-to-HDMI

DP-to-DVI

The system supports triple independent display outputs by connecting display devices to VGA, DVI and DisplayPort connection. To support multiple display outputs and achieve best DisplayPort output resolution in Windows, you need to install corresponding graphics drivers. Please refer to section OS Support and Driver Installation for details.

2.2.8 USB3.2 Gen2x2 Type-C Port

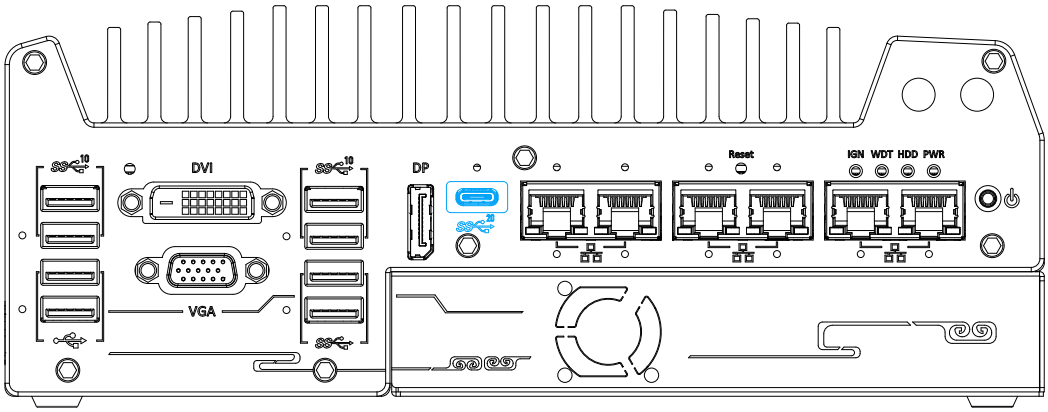

The system's USB 3.2 Gen2x2 type-C port offers up to 20Gbps of data transfer bandwidth, and is implemented via the native xHCI (eXtensible Host Controller Interface) controller. The port is backward compatible with USB3.2 Gen.1 USB 2.0, USB 1.1 and USB 1.0 devices via a USB hub (not included) to connect to external devices.

xHCI driver is supported natively in Windows 10, therefore you do not need to install the xHCI driver prior to utilizing USB functions.

2.2.9 2.5 Ethernet Port/ Optional PoE+

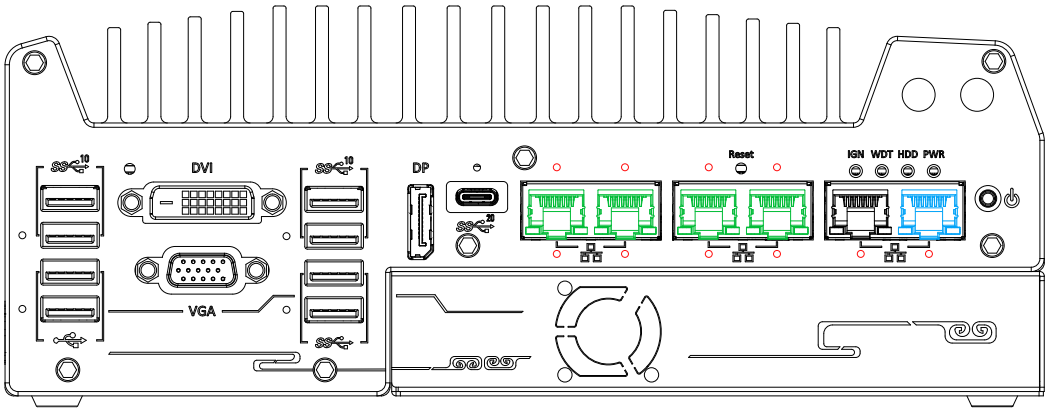

All Nuvo-9000 series systems offer one 2.5GbE port (in **black)** and one GbE port (in **blue**) while Nuvo-9006E/ P/ DE systems have four additional 2.5GbE (with optional Power over Ethernet) ports marked in **green** on the front panel. All Ethernet ports feature panel screw fix holes for a firm connection (indicated in **red**). The port marked in **blue** is implemented using Intel® I219-LM controller that supports Wake-on-LAN and is also compatible with Intel® AMT (Active Management Technology) to support advanced features such as remote SOL desktop and remote on/ off control. There are panel screw fix holes (indicated in **red**) for a firm and secure connection.

Power over Ethernet (PoE) supplies electrical power and data on a standard CAT-5/CAT-6 Ethernet cable. Acting as a PoE PSE (Power Sourcing Equipment), compliant with IEEE 802.3at, each PoE port (indicated in **green**) delivers up to 25W to a Powered Device (PD). The system has a total 100W power budget. PoE ports can automatically detect and determine if the connected device requires power or not, so it is compatible with standard Ethernet devices as well.

Each port has one dedicated PCI Express link for maximum network performance. Please refer to the table below for LED connection statuses.

Active/Link LED (Right)

LED Color	Status	Description
Orange	Off	Ethernet port is disconnected
	On	Ethernet port is connected and no data transmission
	Flashing	Ethernet port is connected and data is transmitting/receiving

Speed LED (Left)

LED Color	Status	Description
Green or Orange	Off	10 Mbps
	Green	100 Mbps
	Orange	1000/ 2500 Mbps

To utilize the Ethernet ports in Windows, you need to install corresponding driver for Intel® I226-IT and I219-LM controllers.

2.2.10 Reset Button

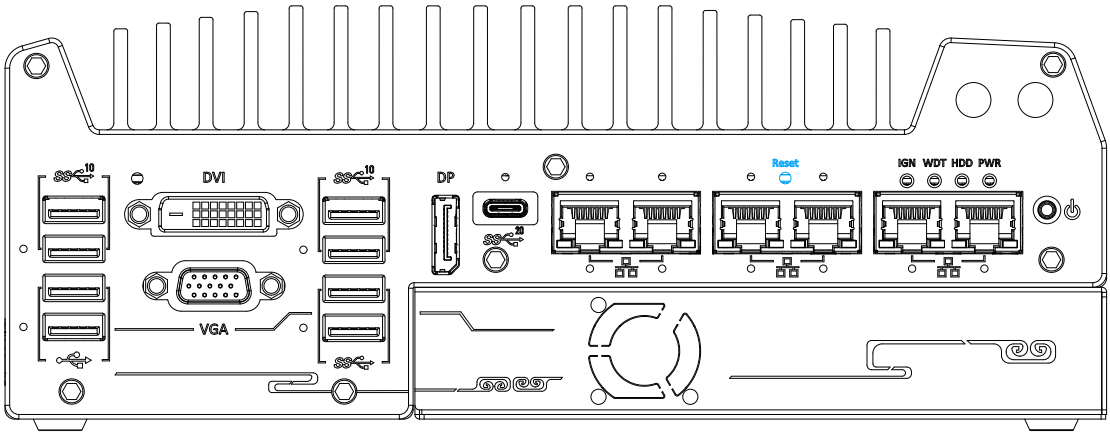

The reset button is used to manually reset the system in case of system halt or malfunction. To avoid unexpected reset, the button is purposely placed behind the panel. To reset, please use a pin-like object (eg. tip of a pen) to access the reset button

2.2.11 LED Indicators

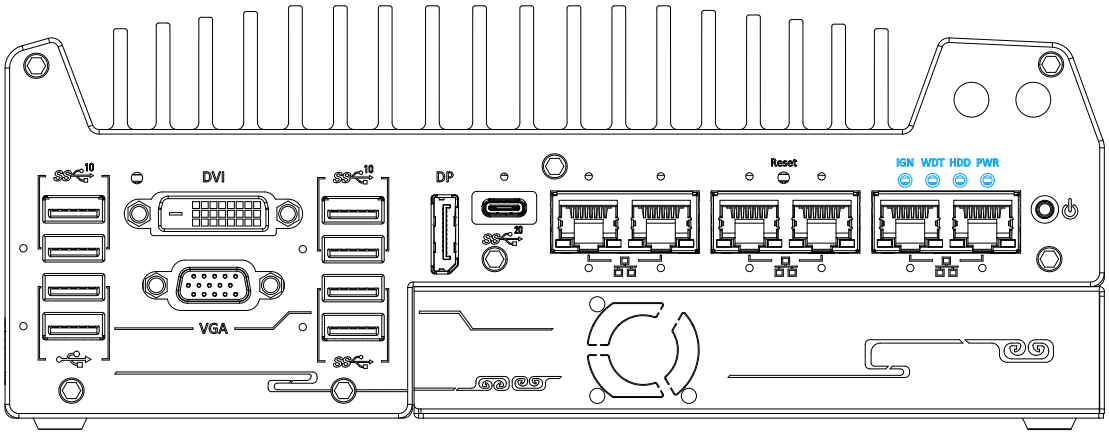

There are four LED indicators on the I/O panel: IGN, WDT, HDD and PWR. The descriptions of these four LED are listed in the following table.

Indicator	Color	Description
IGN	Yellow	Ignition signal indicator, lid when IGN is high (12V/ 24V).
WDT	Yellow	Watchdog timer LED, flashing when WDT is active.
HDD	Red	Hard drive indicator, flashing when hard disk drive is active.
PWR	Green	Power indictor, lid when system is on.

2.2.12 Power Button

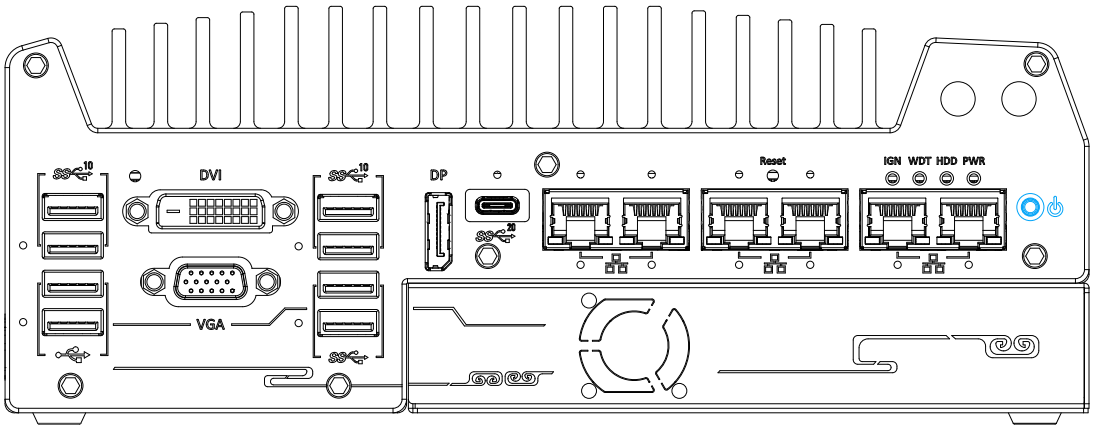

The power button is a non-latched switch for ATX mode on/off operation. To turn on the system, press the power button and the PWR LED should light-up green. To turn off the system, issuing a shutdown command in OS is preferred, or you can simply press the power button. To force shutdown when the system freezes, press and hold the power button for 5 seconds. Please note that there is a 5-second interval between on/off operations (i.e. once the system is turned off, there is a 5-second wait before you can power-on the system).

2.2.13 Hot-swappable 2.5” HDD/ SSD Slot (Nuvo-9000LP Series Only)

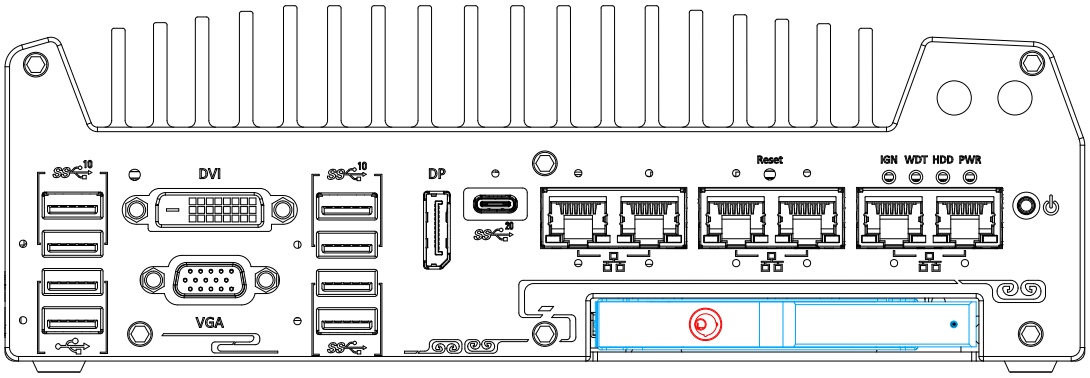

The Nuvo-9000LP series supports an external 2.5” HDD/ SSD via a hot-swappable slot. Designed for easy access, the HDD/ SSD slot is secured by a lock (indicated in **red**) and it supports RAID modes 0/ 1 configuration by combining with the internal HDD/ SSD drive for OS installation (coupled with the internal HDD). To set up RAID, please refer to RAID Volume Configuration section for details.

NOTE

Tray supports up to 7mm thickness HDD/ SSD.

2.2.14 Cassette Module

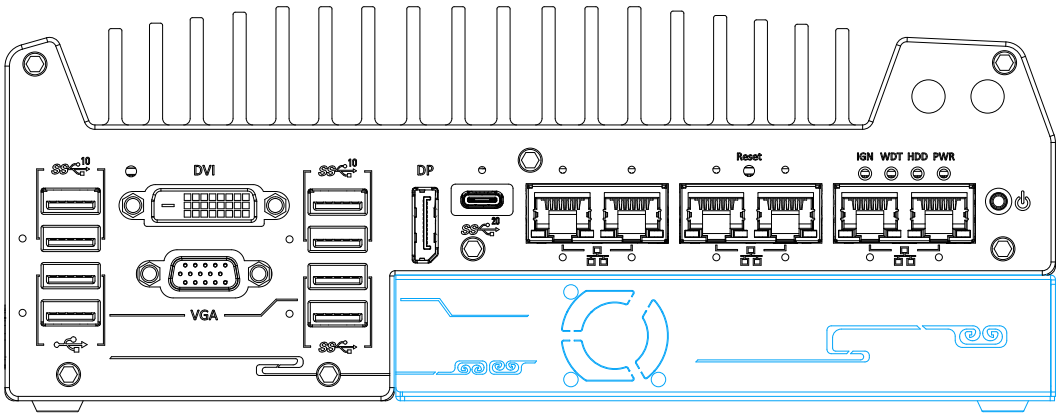

Neousys' patented expansion Cassette (R.O.C. Patent No. M456527) provides a separated compartment to accommodate an add-on card. It effectively manages thermal conditions of both the system and the add-on card. The modular concept brought by Cassette module also reduces the complexity of installing and replacing an add-on card in the fanless controller.

Expansion configuration / System	Expansion slot(s)
Nuvo-9000E series	1x PCIe x16 slot @ Gen3, 8-lanes
Nuvo-9000P series	1x 32bit/ 33MHz PCI slot
Nuvo-9000DE series	2x PCIe x16 slots @ Gen3 8-lanes

2.3 Rear Panel I/O

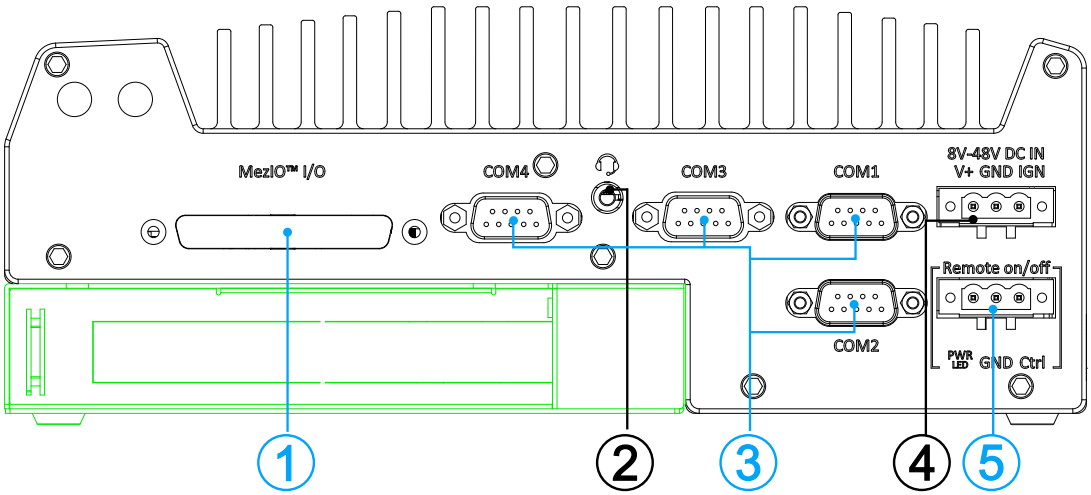

Nuvo-9000 series

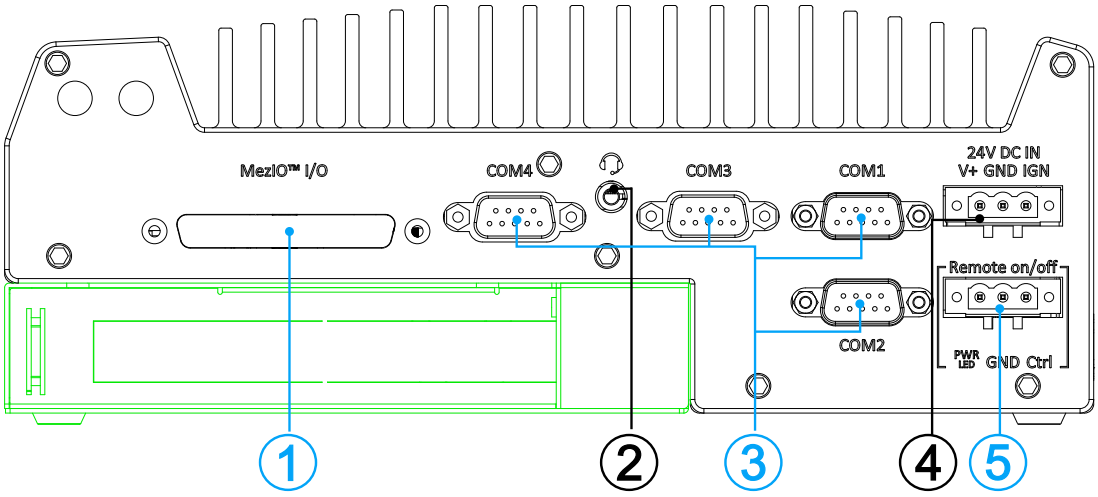

Nuvo-9000 UL series

The Nuvo-9000 rear panel features MezIO® port, four (4) COM ports, 3-pin terminal and 3-pin on/ off control. The Cassette module can be located at the bottom of the enclosure. The connectors of the installed PCI or PCIe card within the Cassette module can be accessed from this side of the panel.

No.	Item	Description
1	MezIO® I/O	Reserved for MezIO® I/O connector. Connector may vary depending on your choice of MezIO™ module.
2	4-Pole 3.5mm headphone/	The 4-pole 3.5mm jack accepts microphone voice input and headphone speaker sound output.

	microphone jack	
3	COM ports 1-4	The four COM ports offer communication with external devices.
4	3-pin terminal block (DC/ ignition input)	Compatible with DC power input from 8-48V, the terminal block is also used for ignition signal input.
5	3-pin remote on/ off control	Allows for external switch extension when the system is placed inside a cabinet.
Area in green	Cassette module	The cassette module offers a separate compartment to manage thermal conditions and reduce installation complications of an add-on card.

2.3.1 4-Pole 3.5mm Headphone/ Microphone Jack

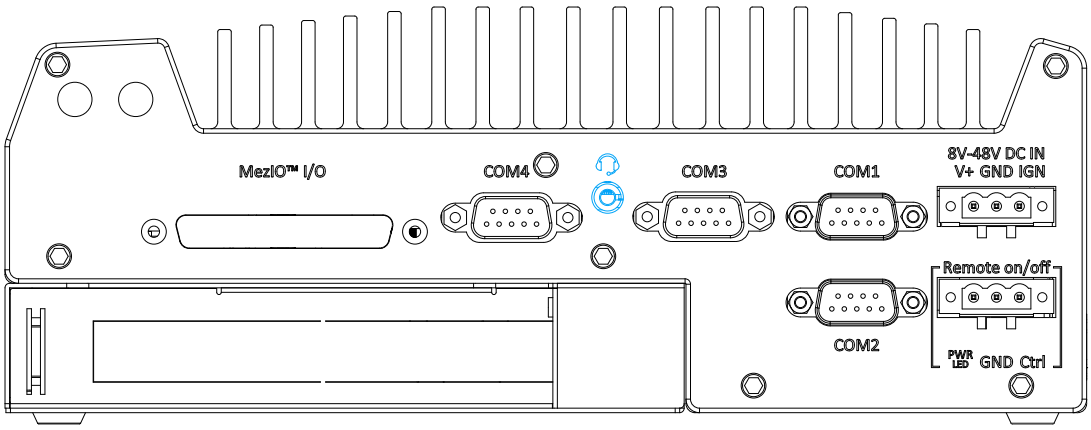

The system audio function uses high definition audio. There is a female 4-pole audio jack for headphone (speaker) output and microphone input. The HD audio codec is natively supported in Windows 10 and Windows 11, and no additional drivers are required to enable the audio function on Nuvo-9000 series.

2.3.2 COM Ports

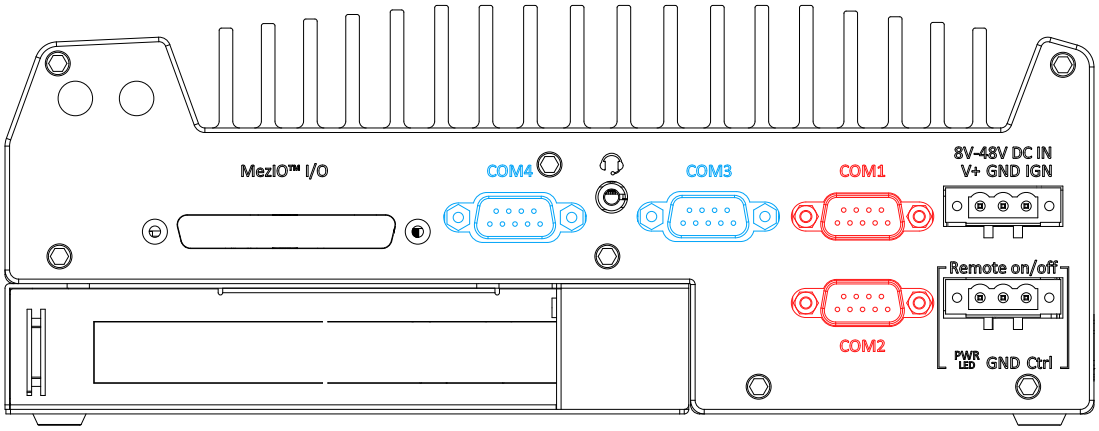

The system provides four COM ports for communicating with external devices. These COM ports are implemented using industrial-grade ITE8786 Super IO chip (-40 to 85°C) and provide up to 115200 bps baud rate.

COM1 and COM2 (in **red**) are software-configurable RS-232/ 422/ 485 ports. COM3 and COM4 (in **blue**) are standard 9-wire RS-232 ports. The operation mode of COM1 and COM2 can be set in BIOS setup utility. The following table describes the pin definition of COM ports.

COM Port Pin Definition

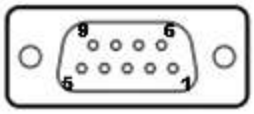

	COM1 & COM2			COM3 & COM4
Pin#	**RS-232 Mode**	**RS-422 Mode**	**RS-485 Mode (Two-wire 485)**	**RS-232 Mode**
1	DCD			DCD
2	RX	422 TXD+	485 TXD+/RXD+	RX
3	TX	422 RXD+		TX
4	DTR	422 RXD-		DTR
5	GND	GND	GND	GND
6	DSR			DSR
7	RTS			RTS
8	CTS	422 TXD-	485 TXD-/RXD-	CTS
9	RI			RI

2.3.3 3-Pin Terminal Block for DC and Ignition Input

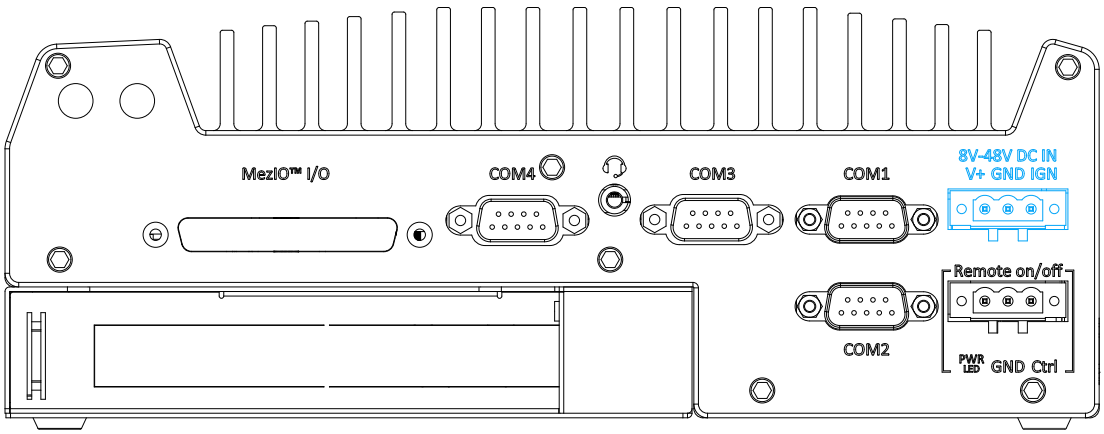

The system accepts a wide range of DC power input from 8 to 48V (24V for Nuvo-9000 UL series systems) via a 3-pin pluggable terminal block, which is fit for field usage where DC power is usually provided. The screw clamping mechanism on the terminal block offers connection reliability when wiring DC power.

In addition to DC power input, this terminal block can also accept ignition signal input (IGN) when ignition control module (eg. MezIO-V20) is installed for in-vehicle applications.

WARNING

Please make sure the voltage of DC power is correct before you connect it to the system. Supplying a voltage over 48V (24V for Nuvo-9000 UL series systems) *will damage the system.*

2.3.4 3-Pin Remote On/ Off

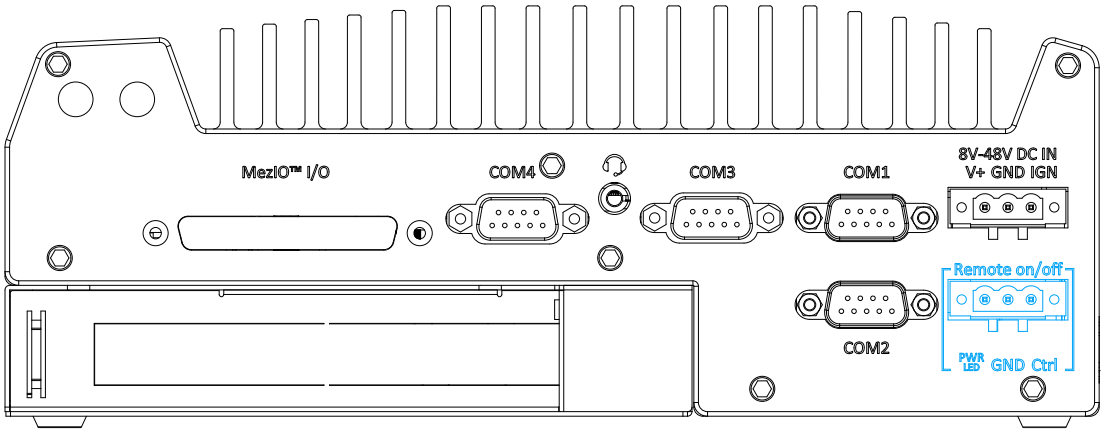

The “Remote On/ Off” 3-pin connection allows for the connection of an external non-latched switch to turn on/ off the system. It is useful when the system is placed in a cabinet or a not easily accessed location. You may connect an external status LED (20mA) indicator by connecting to PWR LED and GND.

2.4 Internal I/O Functions

In addition to I/O connectors on the front panel, the system also provides internal on-board connectors, such as remote on/off control, LED status output, internal USB 2.0 ports, etc. In this section, we'll illustrate these internal I/O functions.

2.4.1 Dual SODIMM DRAM Slot

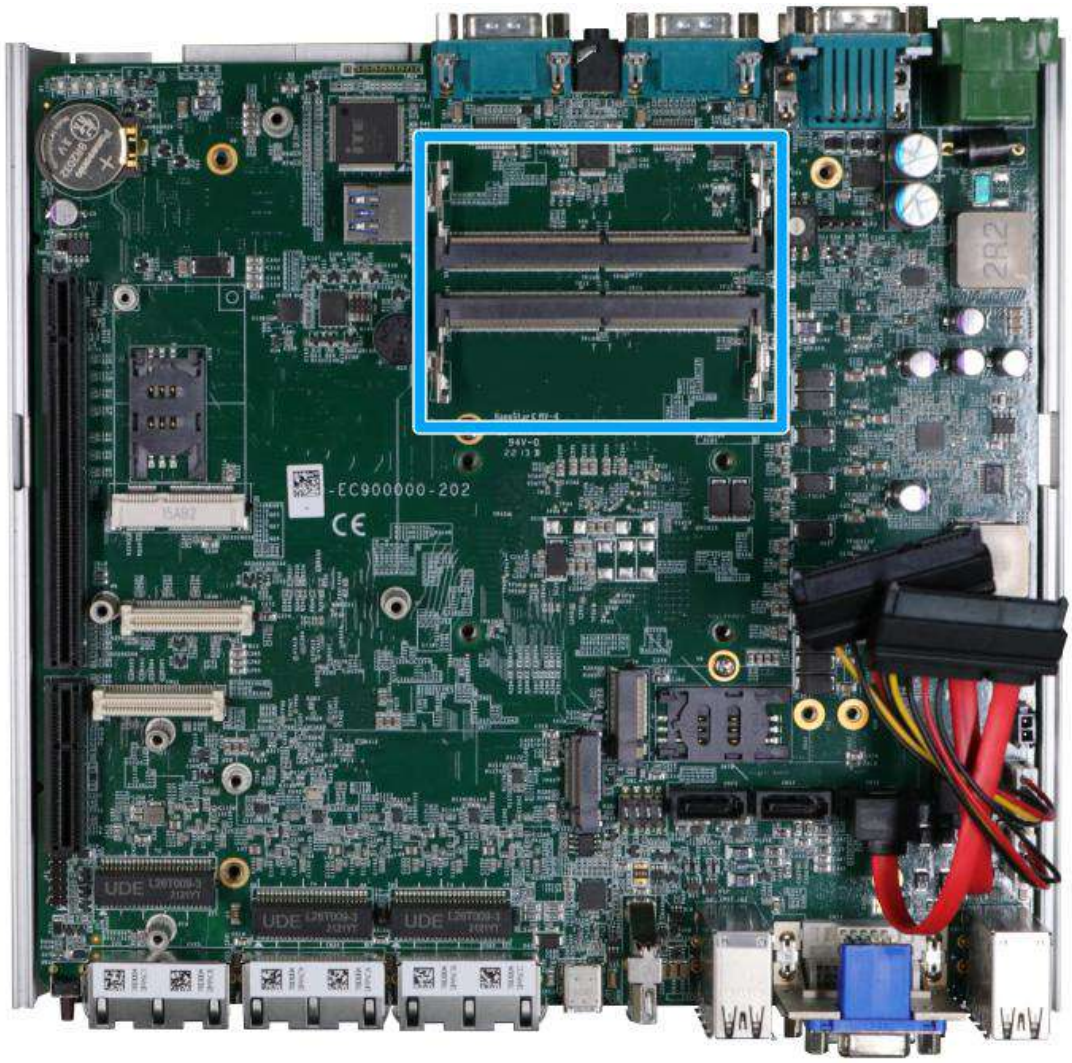

The system motherboard supports two DDR5 4800 SODIMMs memory module up to 128GB. Each slot supports single module SODIMM up to 64GB capacity.

NOTE

When changes are made to DRAM module(s), such as additionally install or remove and reinstall (into the same/ different slot), it will result in approximately a 30 to 60 seconds delay when booting up for the first time after such change(s).

2.4.2 mini-PCIe Socket & Pin Definition

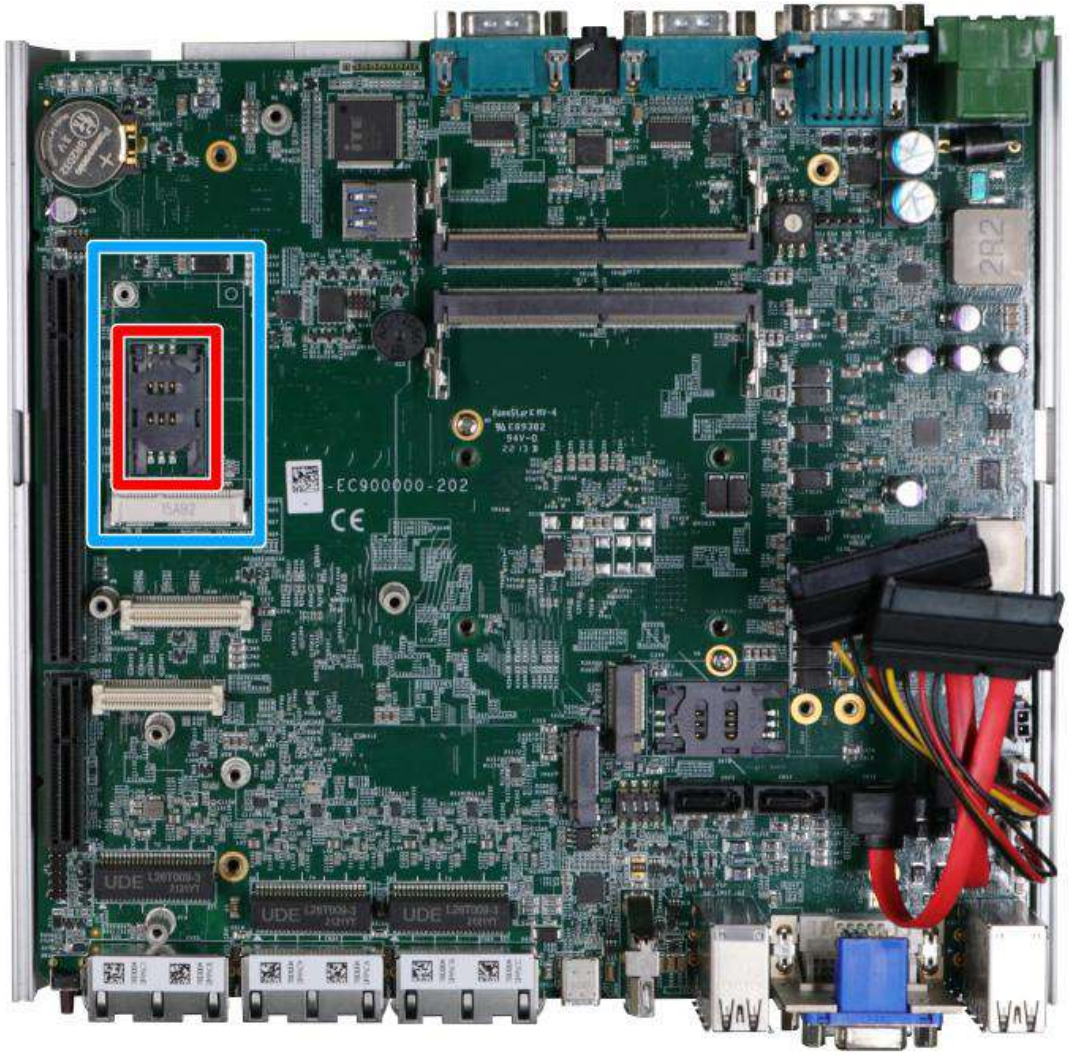

The system provides a mini-PCIe socket (indicated in **blue**) that is in compliance with mini-PCIe specification rev. 1.2. This mini-PCIe socket is designed with SIM card (slot indicated in **red**) support. With a SIM card installed, your system can access the internet via your network provider's 4G/ 3G network.

For wireless (WiFi/ 4G/ 3G) communication, multiple SMA antenna apertures can be located on the front and rear panel.

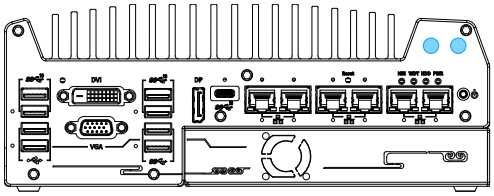

Front panel antennae opening

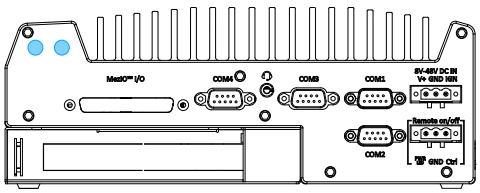

Rear panel antennae opening

mini-PCIe socket definition

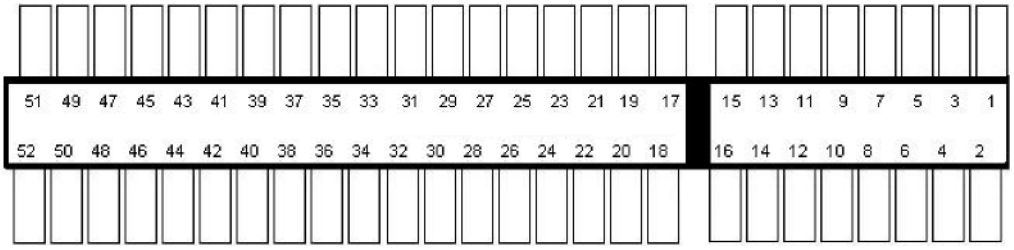

Pin	Signal (mPCIe)	Pin #	Signal (mPCIe)
1	WAKE#	2	+3.3Vaux
3	-	4	GND
5	-	6	+1.5V
7	CLKREQ#	8	UIM_PWR
9	GND	10	UIM_DATA
11	REFCLK-	12	UIM_CLK
13	REFCLK+	14	UIM_RESET
15	GND	16	UIM_VPP
Mechanical Key			
17	Reserved* (UIM_C8)	18	GND
19	Reserved* (UIM_C4)	20	W_DISABLE#
21	GND	22	PERST#
23	PERn0	24	3.3V
25	PERp0	26	GND
27	GND	28	+1.5V
29	GND	30	SMB_CLK
31	PETn0	32	SMB_DATA
33	PETp0	34	GND
35	GND	36	USB_D-
37	GND	38	USB_D+
39	3.3V	40	GND
41	3.3V	42	-
43	GND	44	-
45	Reserved	46	-
47	Reserved	48	+1.5V
49	Reserved	50	GND
51	Reserved	52	3.3V

WARNING

Some off-the-shelf mini-PCIe 5G/4G modules are not compliant to standard mini-PCIe interface. They use 1.8V I/O signals instead of standard 3.3V I/O and may cause signal conflict. Please consult with Neousys for compatibility when in doubt! Installing an incompatible 4G module may damage the system or the module itself may be damaged.

2.4.3 M.2 2242/ 3042/ 3052 (B Key), Mini-SIM Card Slot & Pin Definition

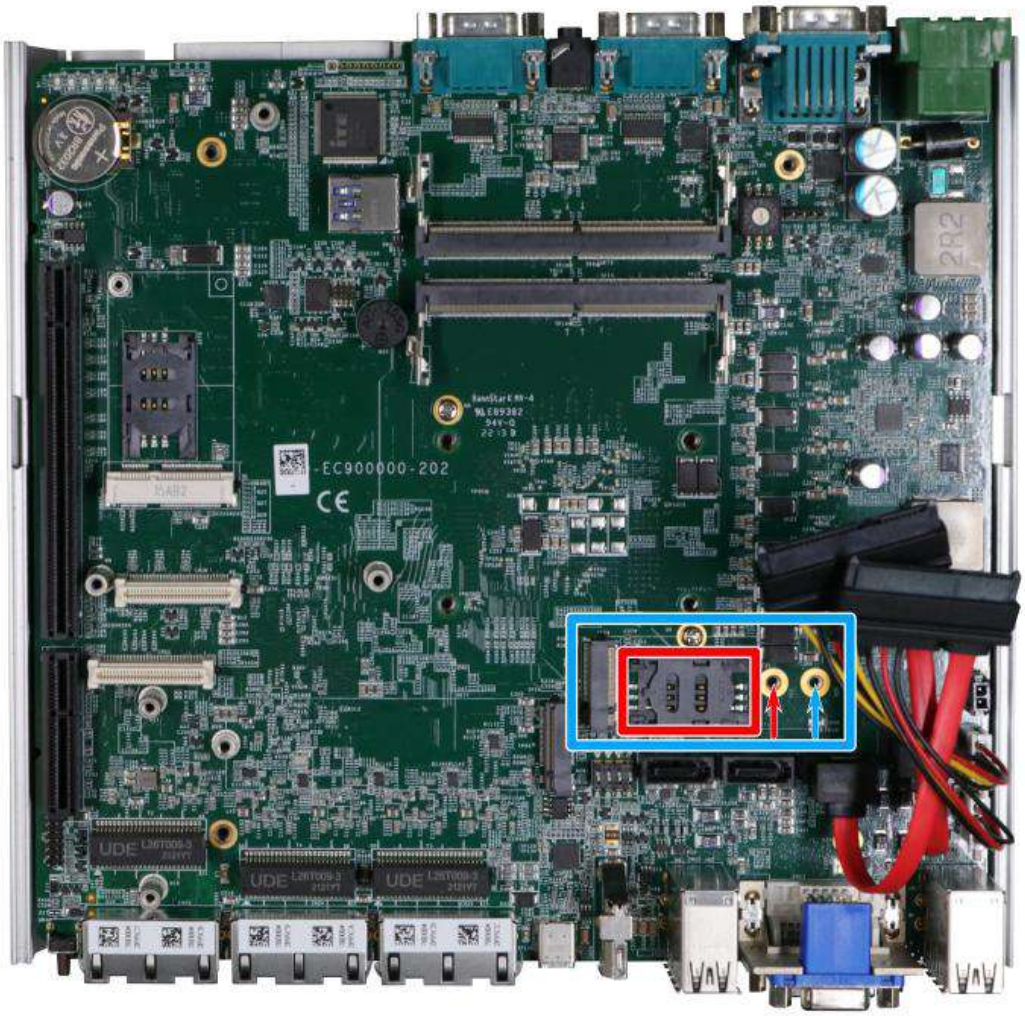

The system has an M.2 2242/ 3042/ 3052 slot (indicated in **blue rectangle**) with a 5G/ 4G SIM slot (indicated in **red rectangle**). A copper standoff is provided for you to secure onto the motherboard into the **red arrow** location for an M.2 2242/ 3042 module, or into the **blue arrow** location for an M.2 3052 module. By installing a 5G or 4G M.2 module and SIM card, you can access the internet via the provider's network.

For wireless 5G/ 4G, SMA antenna apertures are located on front/ rear panels.

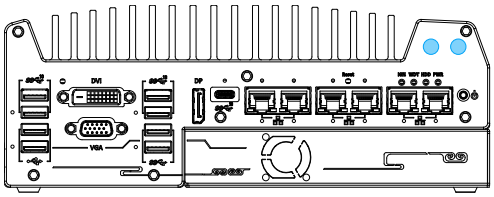

Front panel antennae opening

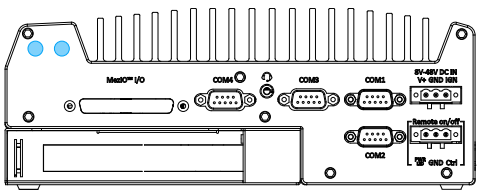

Rear panel antennae opening

M.2 (B Key) Slot Pin Definition

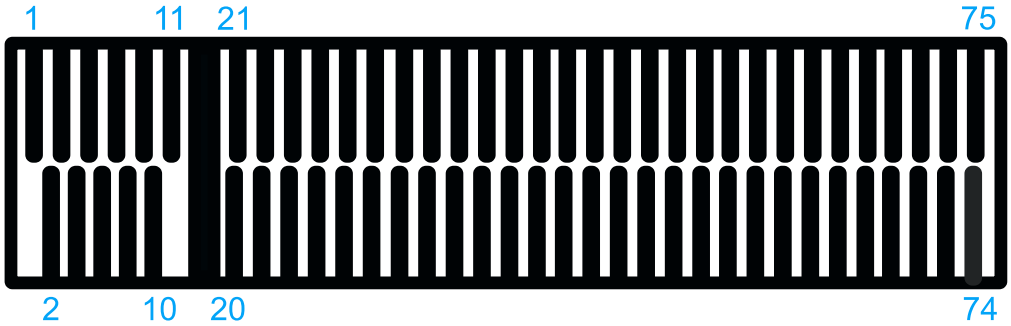

Pin #	Signal	Pin #	Signal
1	-	**2**	+3V3
3	GND	**4**	+3V3
5	GND	**6**	FULL_CARD_POWER_OFF_N
7	USB_D+	**8**	W_DISABLE_N
9	USB_D-	**10**	-
11	GND		
Mechanical Key			
21	-	**20**	-
23	-	**22**	-
25	-	**24**	-
27	GND	**26**	-
29	USB3.0-RX-	**28**	-
31	USB3.0-RX+	**30**	UIM1-RESET
33	GND	**32**	UIM1-CLK
35	USB3.0-TX-	**34**	UIM1-DATA
37	USB3.0-TX+	**36**	UIM1-PWR
39	GND	**38**	-
41	PERn0	**40**	UIM2-DET
43	PERp0	**42**	UIM2-DATA
45	GND	**44**	UIM2-CLK
47	PETn0	**46**	UIM2-RST
49	PETp0	**48**	UIM2-PWR
51	GND	**50**	PERST_N
53	REFCLKN	**52**	-
55	REFCLKP	**54**	-
57	GND	**56**	-
59	-	**58**	-
61	-	**60**	-
63	-	**62**	-
65	-	**64**	-
67	RESET_N	**66**	UIM1_DETECT
69	CONFIG_1	**68**	-
71	GND	**70**	+3V3
73	GND	**72**	+3V3
75	-	**74**	+3V3

2.4.4 SATA Ports

The system has four SATA ports which support Gen3, 6 Gb/s SATA signals. Each SATA port (indicated in **blue**) features a 7-pin SATA connector. However, due to mechanical restrictions, only two SATA ports can be accommodated inside the Nuvo-9000 series.

The two power connectors (indicated in **red**) can accommodate a 2.5” HDD/ SSD each in the internal HDD bracket. Standard 22-pin SATA connectors are provided with the system. You may refer to the SATA Configuration section for SATA settings.

NOTE

Supports up to 15mm thickness HDD/ SSD.

2.4.5 DIP Switch

The DIP switch (indicated in **blue**) should be already configured out of the factory. Users need only set the 4th DIP switch to ON for BIOS update and switch it back to the OFF position when BIOS upgrade has completed. The table below shows the system default DIP switch settings for reference purposes.

System	Default DIP switch setting	Enable BIOS upgrade
Nuvo-9000E/ LP/ P/ DE	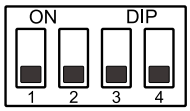	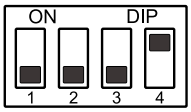

NOTE

Changing any DIP switches to the ON or OFF position will result in extra detection time during the start up process.

2.4.6 On/ Off Ctrl & Status Output

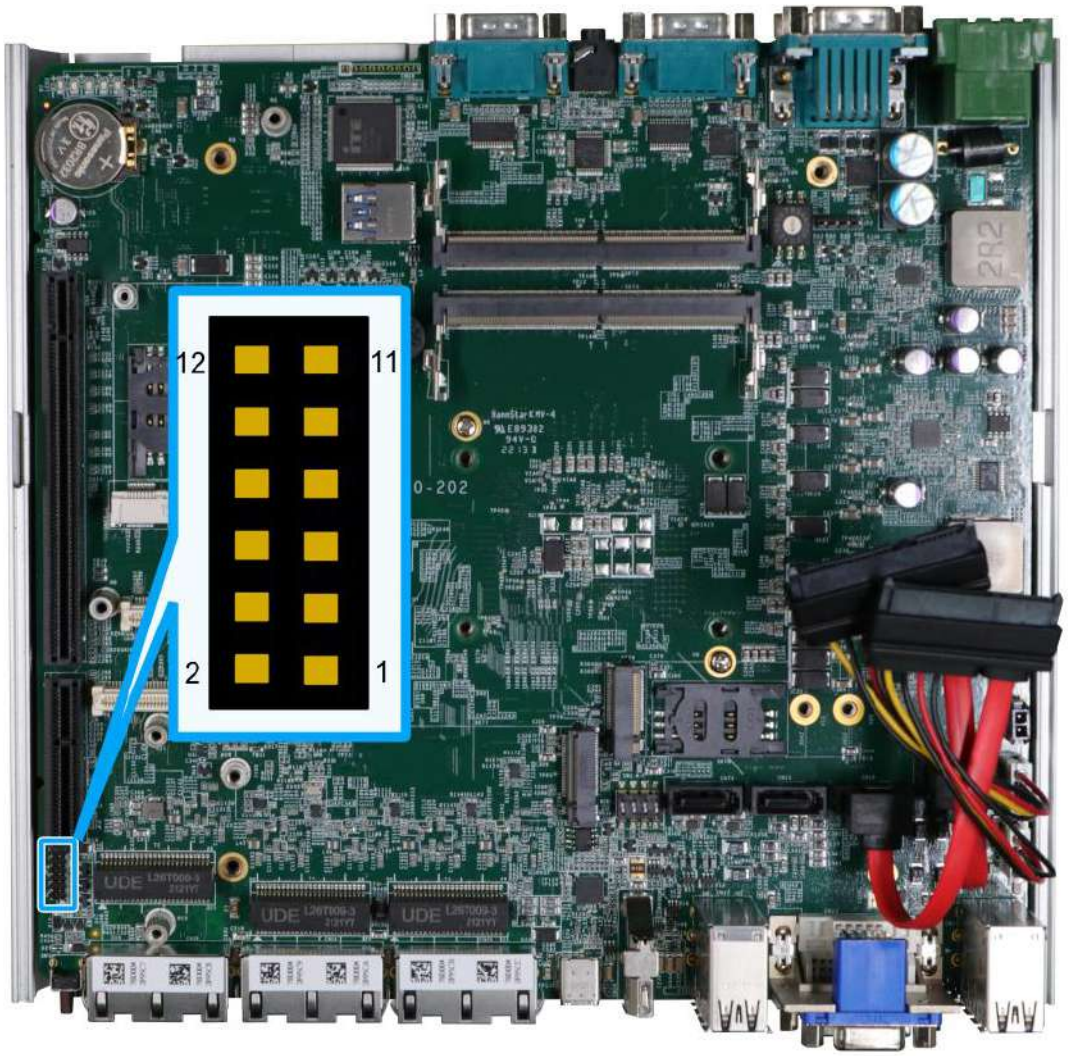

Pin#	Definition	Description
1	WDT_LED-	[Output] Watchdog timer indicator, flashing when Watchdog timer is active
2	WDT_LED+	
3	Standby Power-	[Output] Standby power indicator, on if DC power is applied and system is in S5 (standby) mode.
4	Standby Power+	
5	HDD-	[Output] Hard drive indicator, flashing when SATA hard drive is active.
6	HDD+	
7	Power-	[Output] System power indicator, on if system is turned on, off if system is turned off.
8	Power+	
9	Ctrl-	[Input] Remote on/off control, connects to an external switch to turn on/off the system (polarity is negligible).
10	Ctrl+	
11	IGN_LED-	[Output] Ignition control indicator, on if ignition control is on, off if ignition control is off.
12	IGN_LED+	

2.4.7 Internal USB 2.0 Port

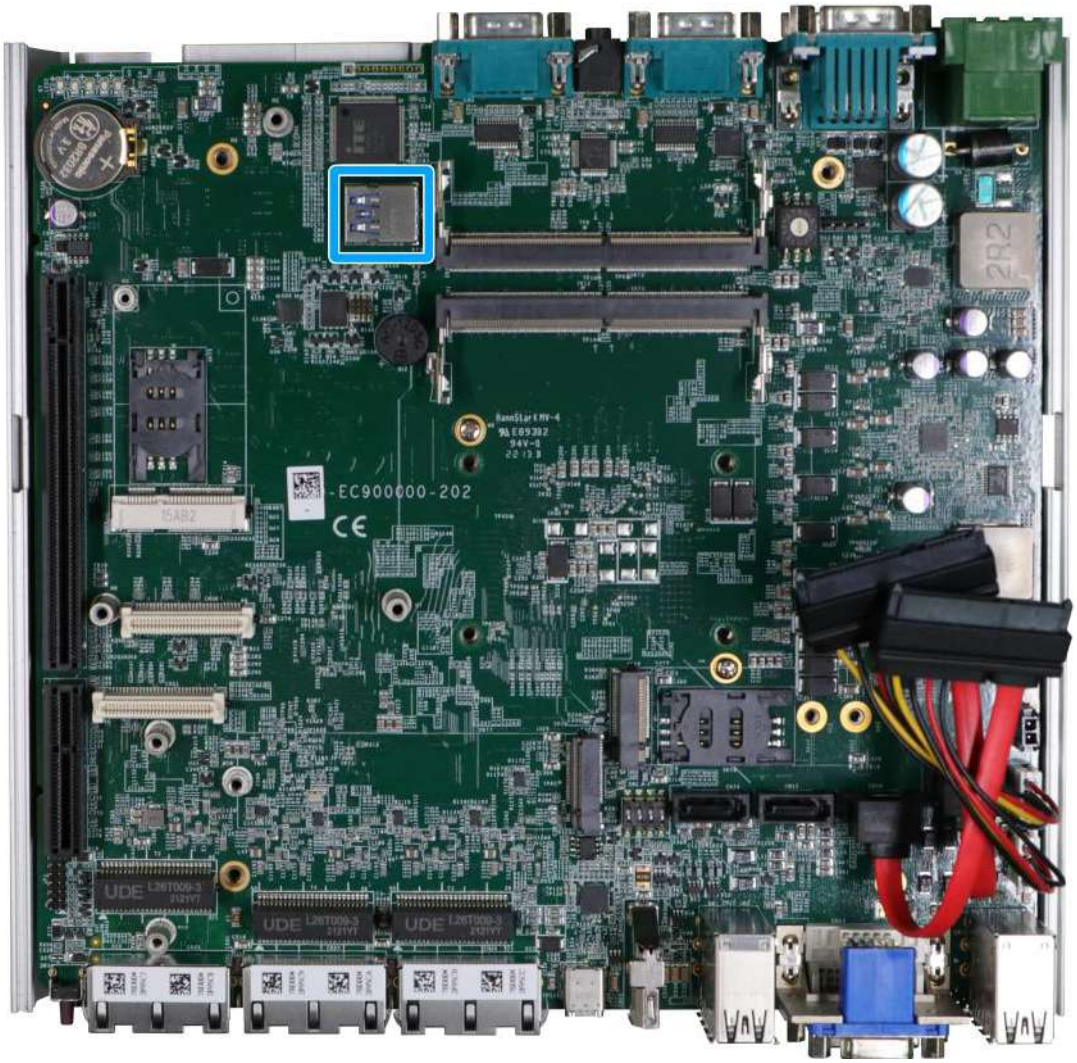

The system's motherboard has an internal USB2.0 port on the PCBA. You can utilize this USB port to connect a USB protection dongle inside the chassis of the system.

2.4.8 M.2 2280 (M Key) Slot for NVMe SSD

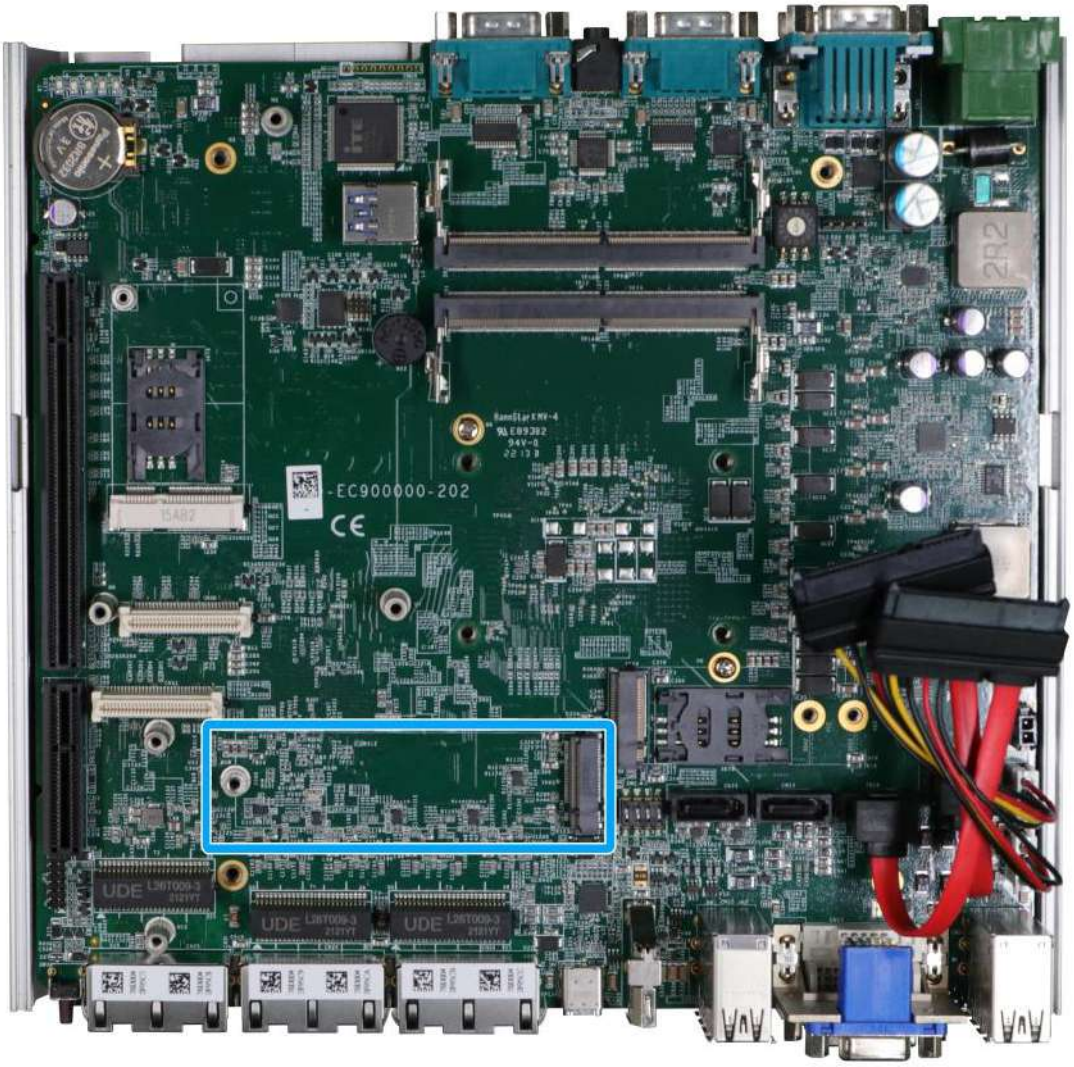

The system has a Gen4 x4 PCIe M.2 2280 slot for you to install an NVMe SSD. The M.2 NVMe SSD offers significantly better system performances when compared to a 2.5” SSD.

M.2 (M Key) Slot Pin Definition

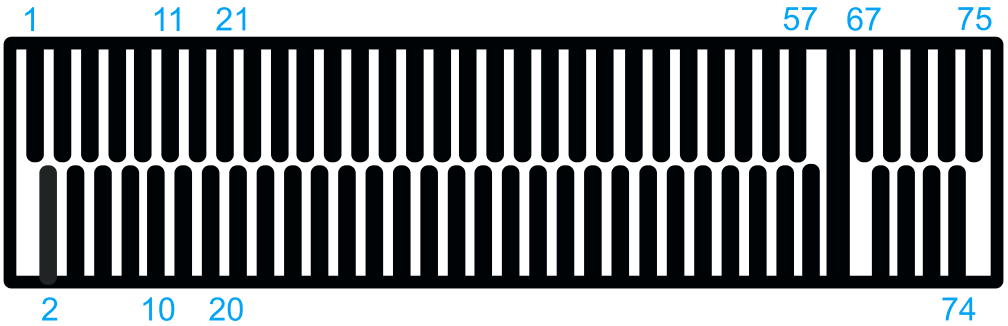

Pin #	Signal	Pin #	Signal
1	GND	**2**	+3V3
3	GND	**4**	+3V3
5	PERN3	**6**	-
7	PERP3	**8**	-
9	GND	**10**	DAS/DSS_N
11	PETN3	**12**	+3V3
13	PETP3	**14**	+3V3
15	GND	**16**	+3V3
17	PERN2	**18**	+3V3
19	PERP2	**20**	-
21	GND	**22**	-
23	PETN2	**24**	-
25	PETP2	**26**	-
27	GND	**28**	-
29	PERN1	**30**	-
31	PERP1	**32**	-
33	GND	**34**	-
35	PETN1	**36**	-
37	PETP1	**38**	-
39	GND	**40**	-
41	PERn0	**42**	-
43	PERp0	**44**	-
45	GND	**46**	-
47	PETn0	**48**	-
49	PETp0	**50**	PERST_N
51	GND	**52**	-
53	REFCLKN	**54**	-
55	REFCLKP	**56**	-
57	GND	**58**	-
Mechanical Key			
67	-	**68**	SUSCLK
69	PEDET	**70**	+3V3
71	GND	**72**	+3V3
73	GND	**74**	+3V3
75	GND		

2.4.9 MezIO® Interface & Pin Definition

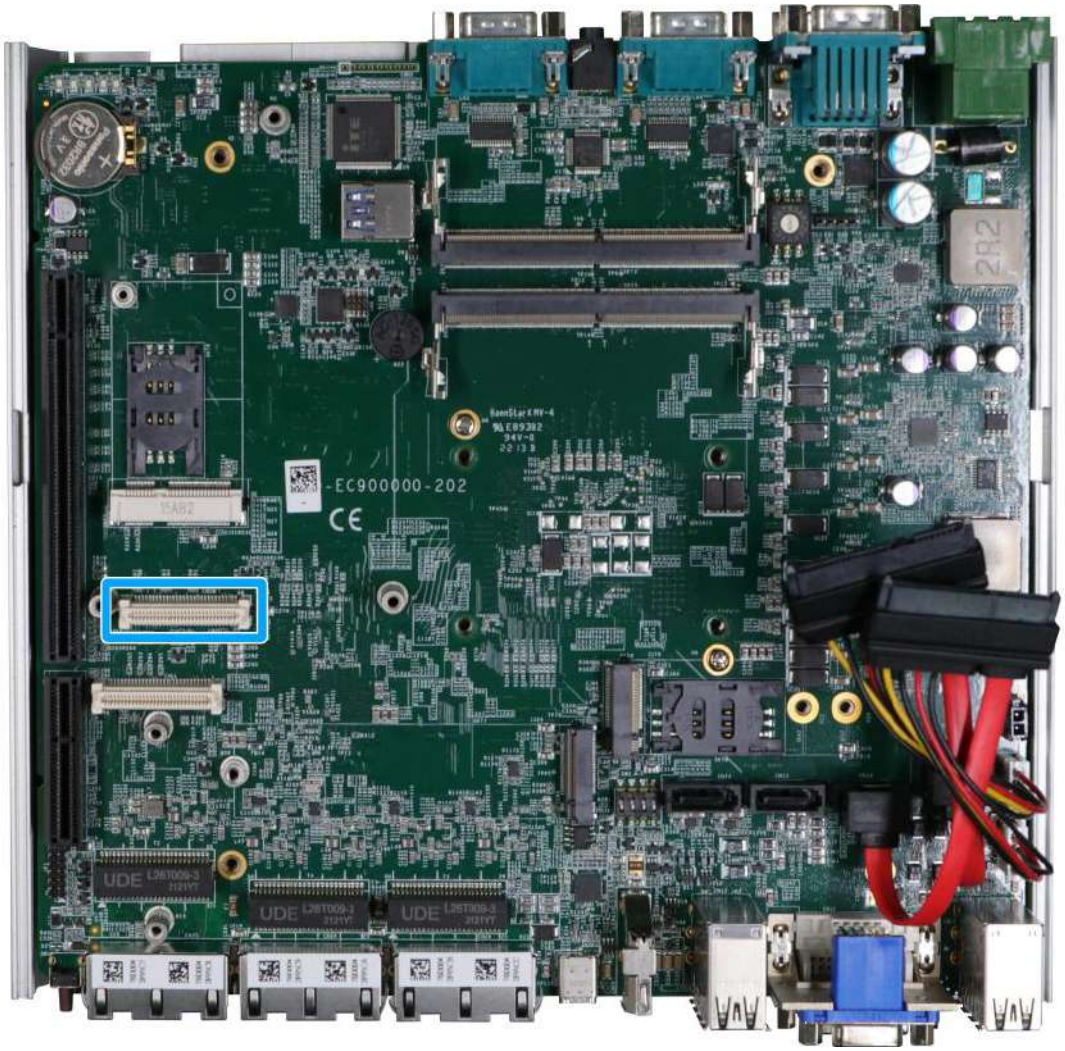

MezIO® is an innovative interface designed for integrating application-oriented I/O functions into an embedded system. It offers computer signals, power rails and control signals via a high-speed connector. MezIO® is also mechanically reliable benefited from its 3-point mounted mezzanine structure. A MezIO® module can leverage these signals to implement comprehensive I/O functions.

The system incorporates MezIO® interface and universal mechanical design to accommodate Neousys' standard MezIO® modules. For customers who want to develop their own MezIO® module, Neousys provides MezIO® design documents on a NDA basis. Please contact Neousys for further information.

MezIO® Interface Pin Definition

MezIO® interface leverages FCI BergStak® board-to-board connector to provide interconnectivity of high-speed signals. The receptacle part on the PCBA is FCI 61082-063402LF while the plug part on the MezIO® module is FCI 61083-064402LF. Please refer to the following table for signal definition of its 60-pin connector.

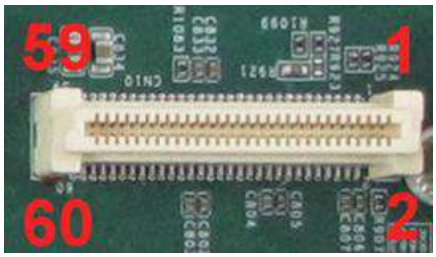

Function Description	Signal	Pin#	Pin#	Signal	Function Description
Reserved	Reserved	1	2	PCIE_TXP_0	PCIe data pair
Reserved	Reserved	3	4	PCIE_TXN_0	PCIe data pair
Reserved	Reserved	5	6	GND	Ground
Reserved	Reserved	7	8	PCIE_RXP_0	PCIe data pair
System S4 signal	SLP_S4#	9	10	PCIE_RXN_0	PCIe data pair
Ground	GND	11	12	CLK100_P_0	PCIe clock pair
Reserved	Reserved	13	14	CLK100_N_0	PCIe clock pair
Ground	GND	15	16	GND	Ground
Reserved	UID_LED	17	18	PCIE_TXP_1	PCIe data pair
Platform reset	PLT_RST#	19	20	PCIE_TXN_1	PCIe data pair
USB data pair	USBP5_N	21	22	PCIE_RXP_1	PCIe data pair
USB data pair	USBP5_P	23	24	PCIE_RXN_1	PCIe data pair
Ground	GND	25	26	GND	Ground
SMB bus	SMB_DATA	27	28	CLK100_P_1	PCIe clock pair
SMB bus	SMB_CLK	29	30	CLK100_N_1	PCIe clock pair
PCIe data pair	PCIE_TXP_3	31	32	GND	Ground
PCIe data pair	PCIE_TXN_3	33	34	PCIE_TXP_2	PCIe data pair
Ground	GND	35	36	PCIE_TXN_2	PCIe data pair
PCIe data pair	PCIE_RXP_3	37	38	GND	Ground
PCIe data pair	PCIE_RXN_3	39	40	PCIE_RXP_2	PCIe data pair
Power button	PWRBTN#	41	42	PCIE_RXN_2	PCIe data pair
Reserved	Reserved	43	44	RXD4	SIO COM4
PCH GPIO	GPIO_RISER3	45	46	TXD4	SIO COM4
PCH GPIO	GPIO_RISER2	47	48	RXD5	SIO COM5
PCH GPIO	GPIO_RISER1	49	50	TXD5	SIO COM5
Ground	GND	51	52	GND	Ground
3.3V power	P3V3	53	54	P1V8	1.8V power
3.3V power	P3V3	55	56	GND	Ground
5V power	P5V	57	58	P12V	12V power
5V power	P5V	59	60	P12V	12V power

3 System Installation

Before disassembling the system enclosure and installing components and modules, please make sure you have done the following:

- It is recommended that only qualified service personnel should install and service this product to avoid injury or damage to the system.
- Please observe all ESD procedures at all times to avoid damaging the equipment.
- Before disassembling your system, please make sure the system has powered off, all cables and antenna (power, video, data, etc.) are disconnected.
- Place the system on a flat and sturdy surface (remove from mounts or out of server cabinets) before proceeding with the installation/ replacement procedure.

3.1 Disassembling the System

To access system internal components, the system needs to be disassembled. To disassemble the system enclosure, you need to remove the Cassette module and screws on both I/O panels.

1. Turn the system upside-down and remove the four screws (indicated in **blue**) at the bottom of the Cassette module.

> **NOTE**
>
> *For Nuvo-9000E/ P/ DE series systems only.*

2. Gently wiggle and separate the Cassette module from the system.

NOTE

For Nuvo-9000E/ P/ DE series systems only.

3. On the front I/O panel, remove the hexa-screws indicated below.

Nuvo-9000E/ P/ DE systems

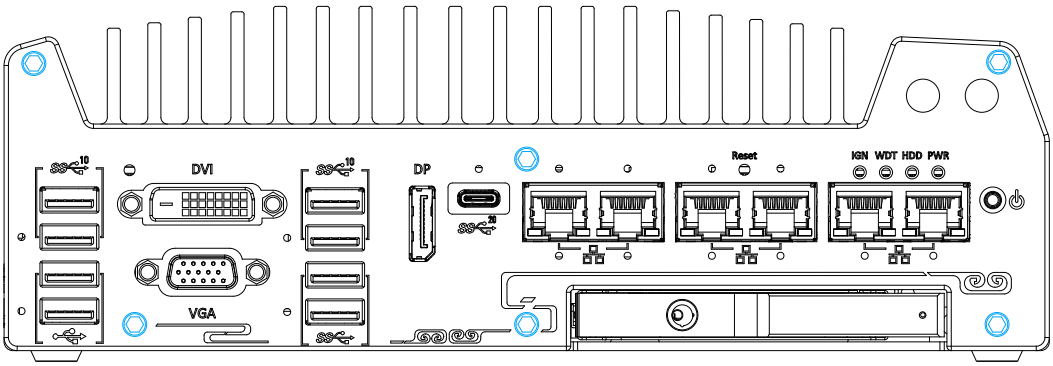

Nuvo-900LP systems

4. Remove the front I/O panel.

Nuvo-9000E/ P/ DE systems

5. On the rear I/O panel, remove the hexa-screws indicated below.

Nuvo-9000E/ P/ DE systems

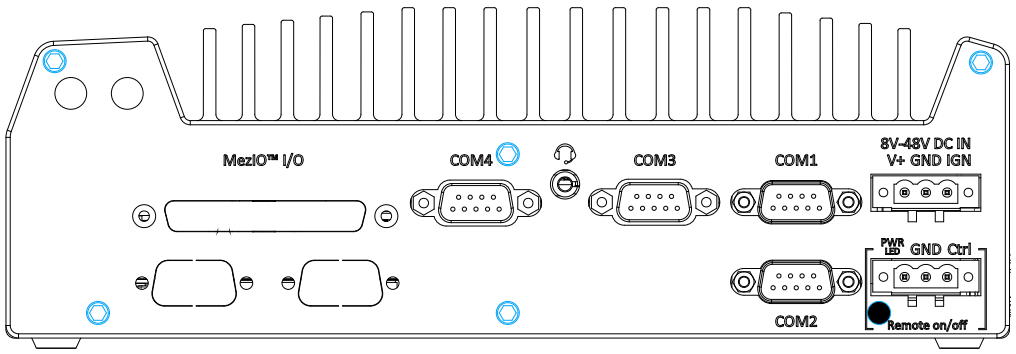

Nuvo-9000LP systems

6. Remove the rear I/O panel.

7. Gently lift the system's bottom panel.

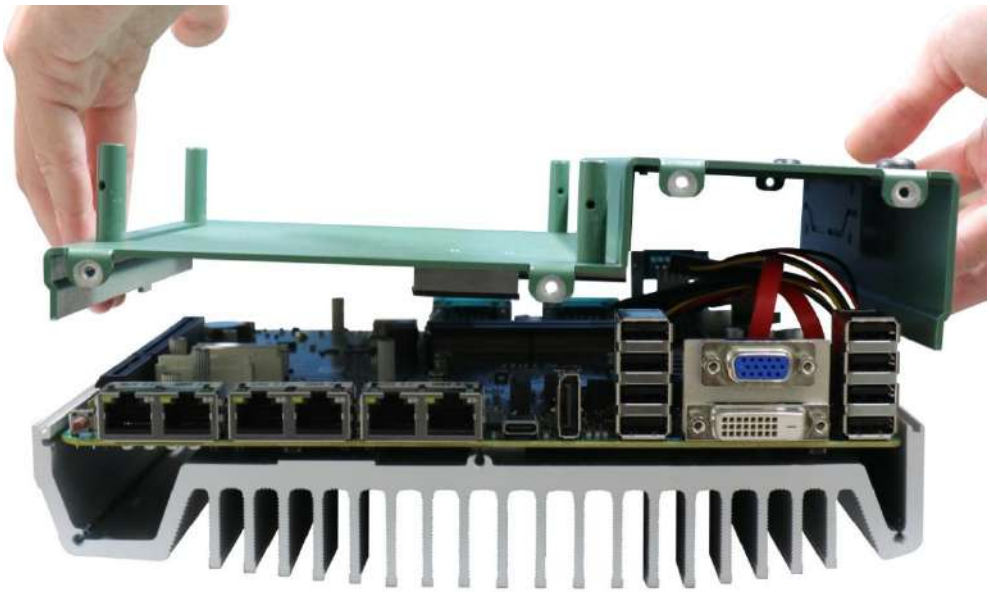

8. Once the bottom panel has been removed, you should have access to the system's internal I/O interfaces.

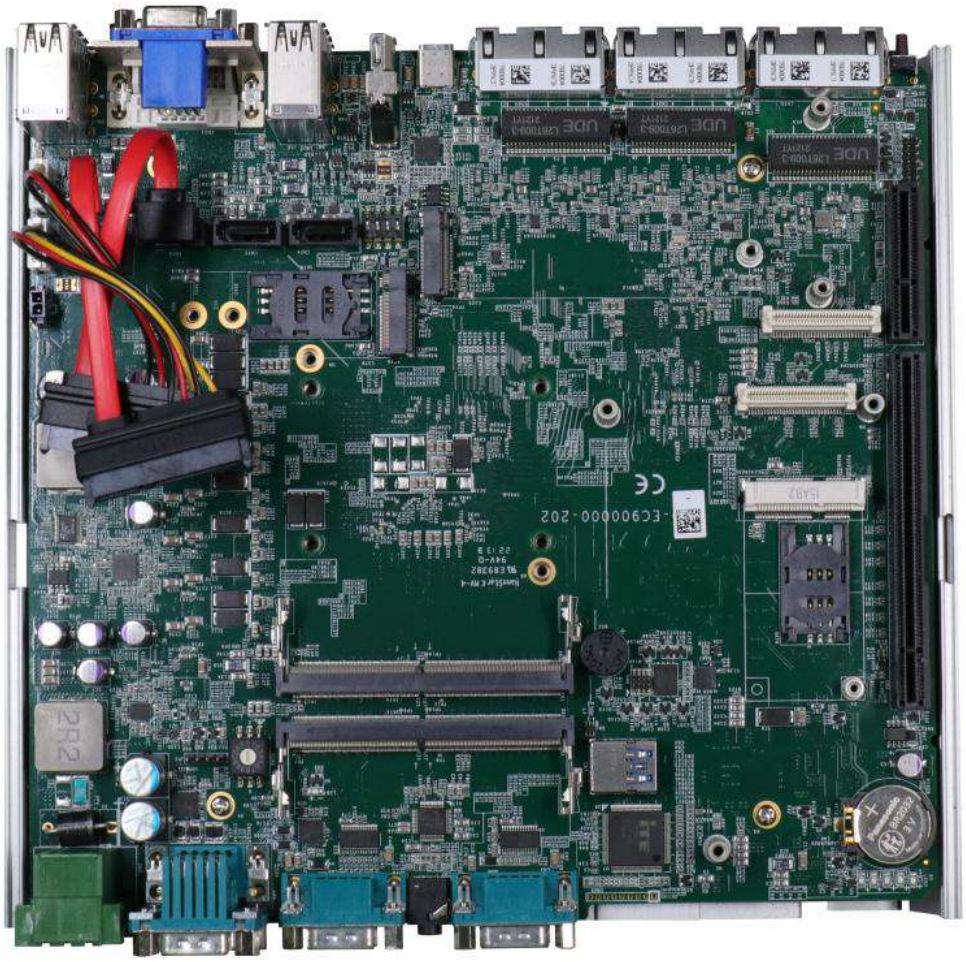

3.2 Installing Internal Components

NOTE

For demonstration purposes, Nuvo-9000E/ P will be used in most illustrations. A dedicated illustration will be shown if the component is significantly different.

3.2.1 CPU Installation for Barebone System

1. To install the CPU, you will need to separate the heatsink and the motherboard.

2. To do so, remove the four screws indicated below.

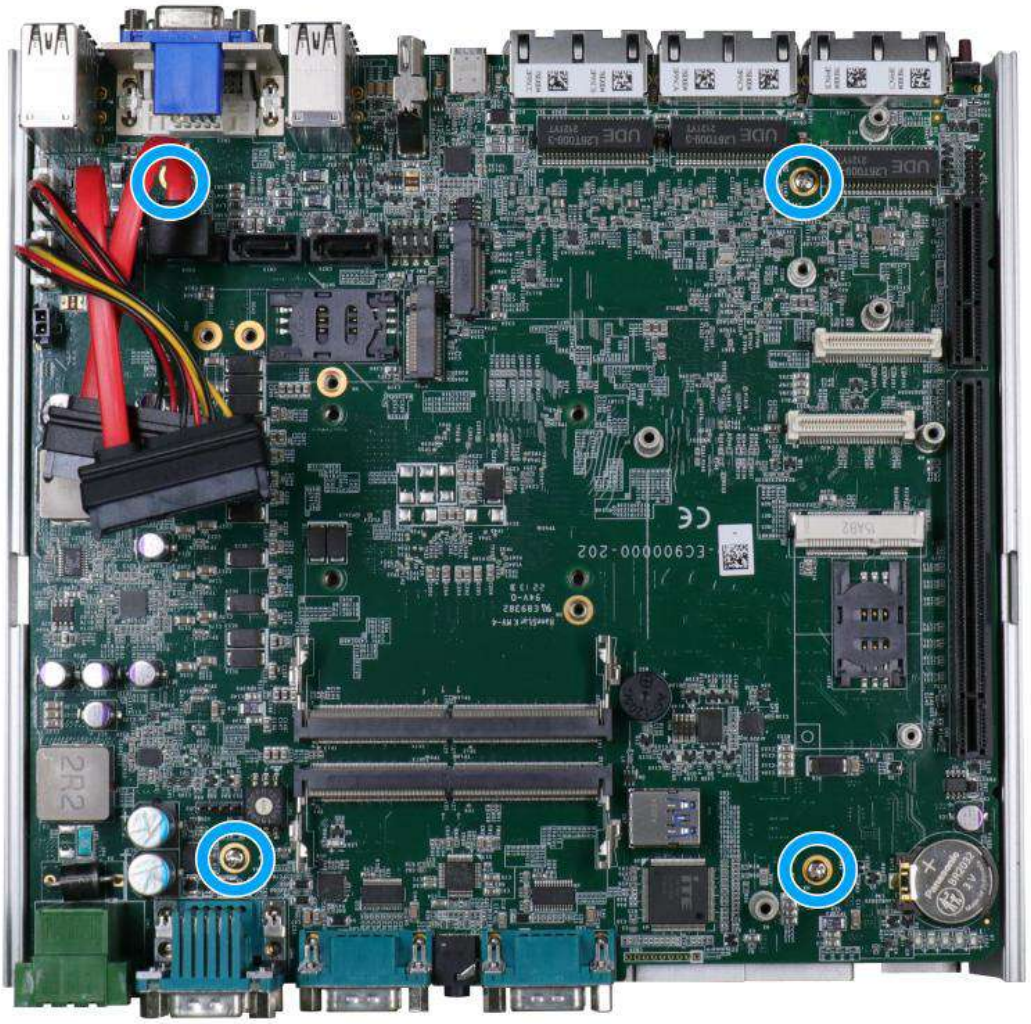

3. Gently separate the motherboard from the heatsink, you'll see the CPU socket protective cover, place finger tips underneath the sign "REMOVE" for leverage and gently lift the cover.

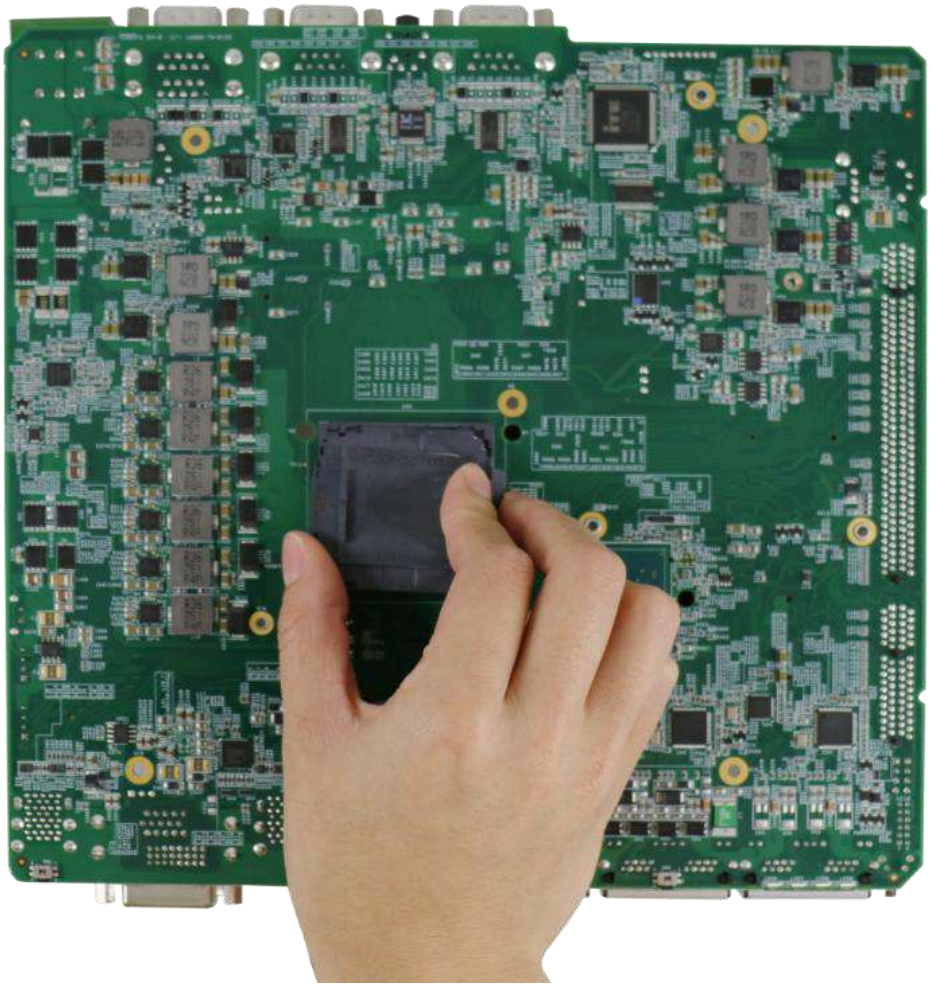

CPU protective cover

WARNING

With the protective cover removed, please be careful when handling the motherboard. DO NOT touch the pins in the LGA socket!

4. Remove the CPU from its container/ tray. Match the four notches on the side (indicated by the **blue arrows**) to the protrusions in the socket, gently lower the CPU into the socket. Pay attention to the seating orientation, notice there is a short side (indicated by **green lines**), and a long side (indicated by **red lines**).

5. Locate the CPU retention bracket (holder) from the accessory box. Place the retention bracket on the CPU and hold it in place. Make sure the indicator triangle engraved on the CPU's integrated heat spreader (HIS) and the triangle indicator on the retention bracket are positioned in the same corner (indicated by **blue circles**).

6. Turn the motherboard around while holding the CPU retention bracket in-place, and secure the bracket by tightening two M3 P-head screws on the other side of the motherboard.

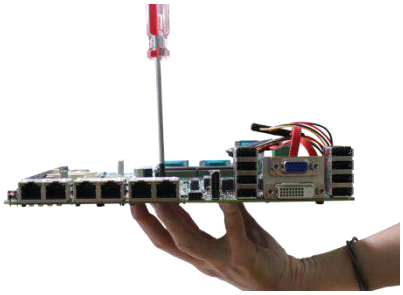	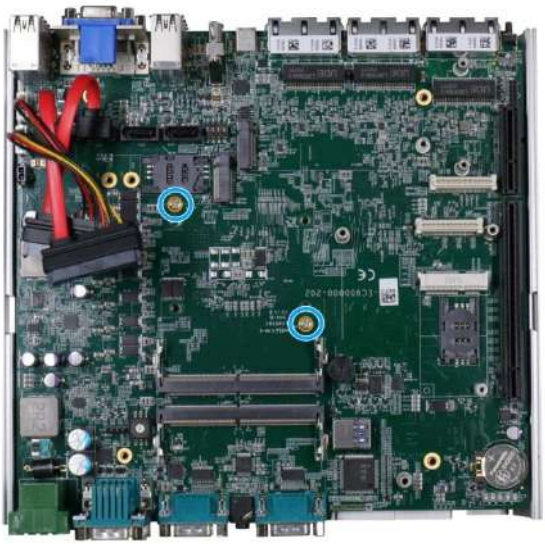
Hold CPU bracket firmly and turn the motherboard around	**Secure two M3 P-head screws**

7. Remove all thermal pads' protective films on the heatsink.

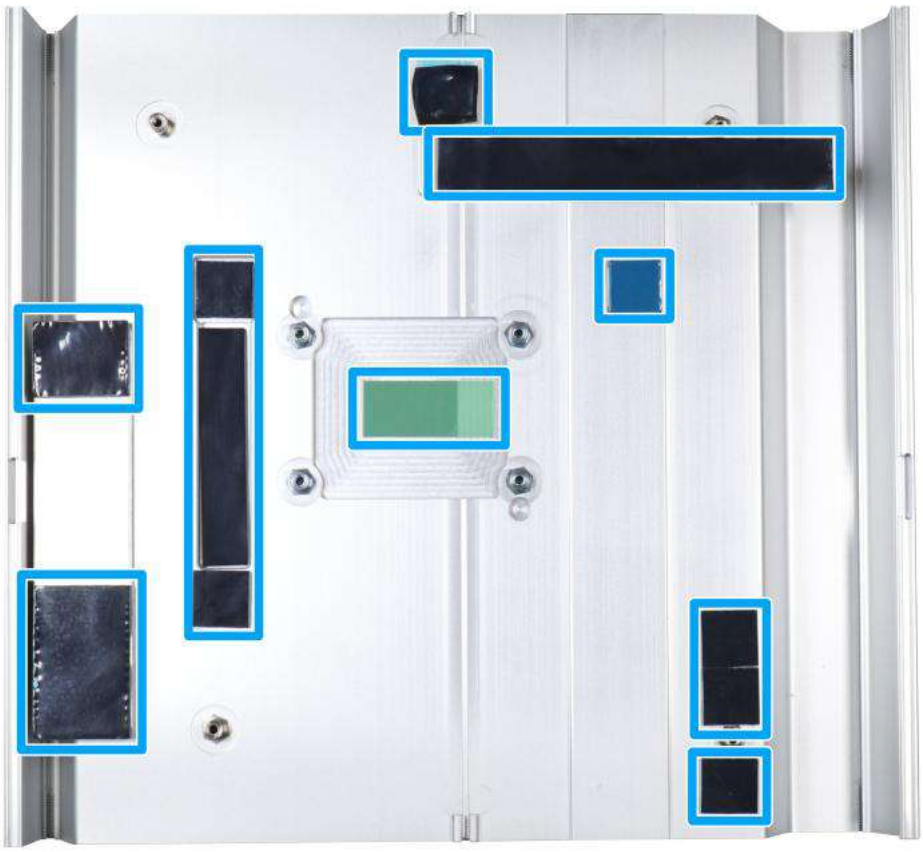

8. With the four motherboard standoffs aligned, gently lower the motherboard onto the heatsink and secure the four screws. Please remember to remove the protective film (indicated in **red**) on the CPU's thermal pad as well.

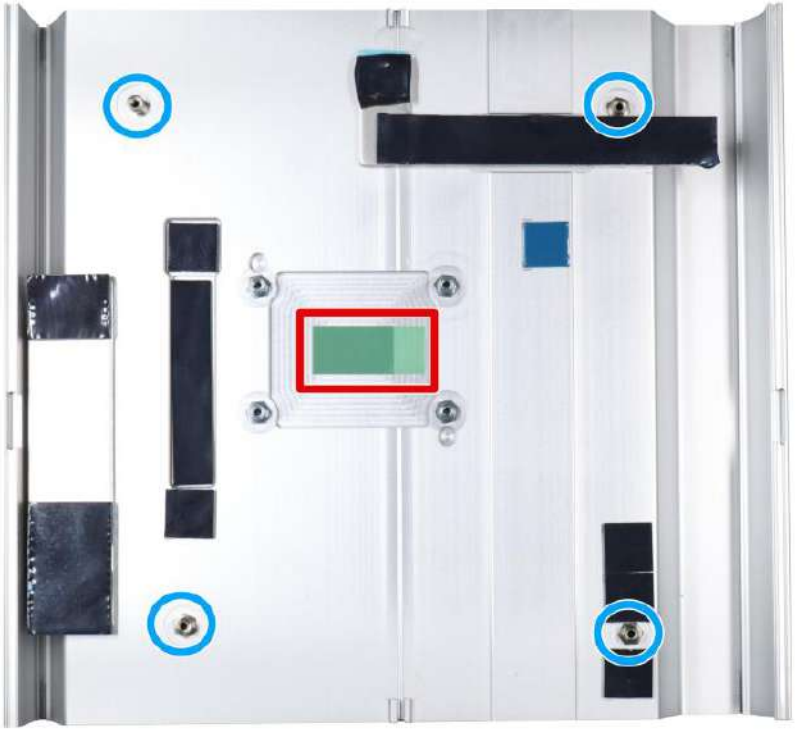

Four standoffs on the heatsink

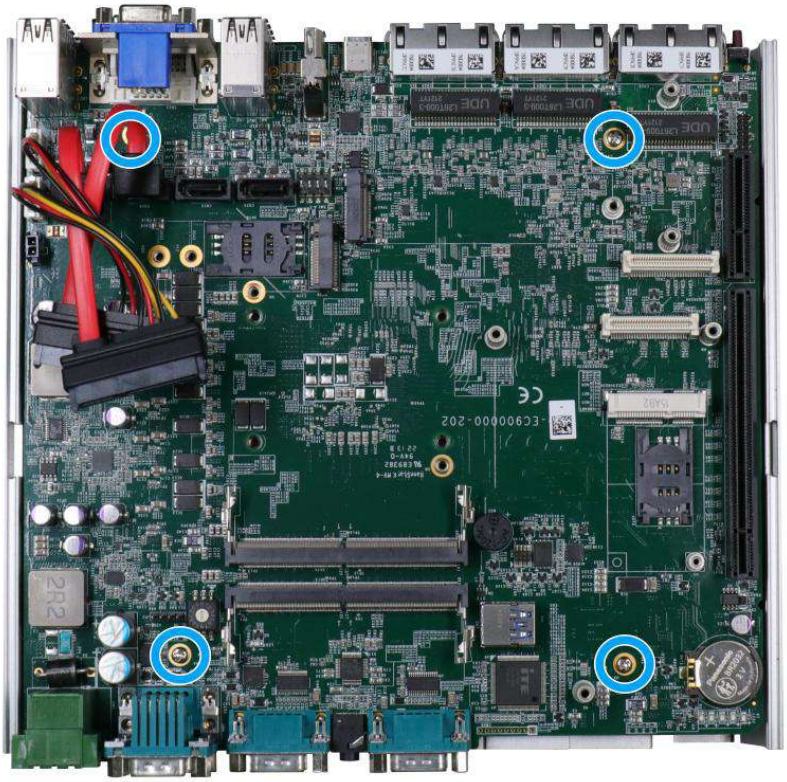

Secure motherboard with four screws

9. Once the motherboard has been installed, you're ready to secure the four screws that help the heatsink apply pressure to the CPU/ chipset die. You'll want to apply even pressure to the corners by gradually tightening each screw. Please refer to the recommended order when tightening the screws.

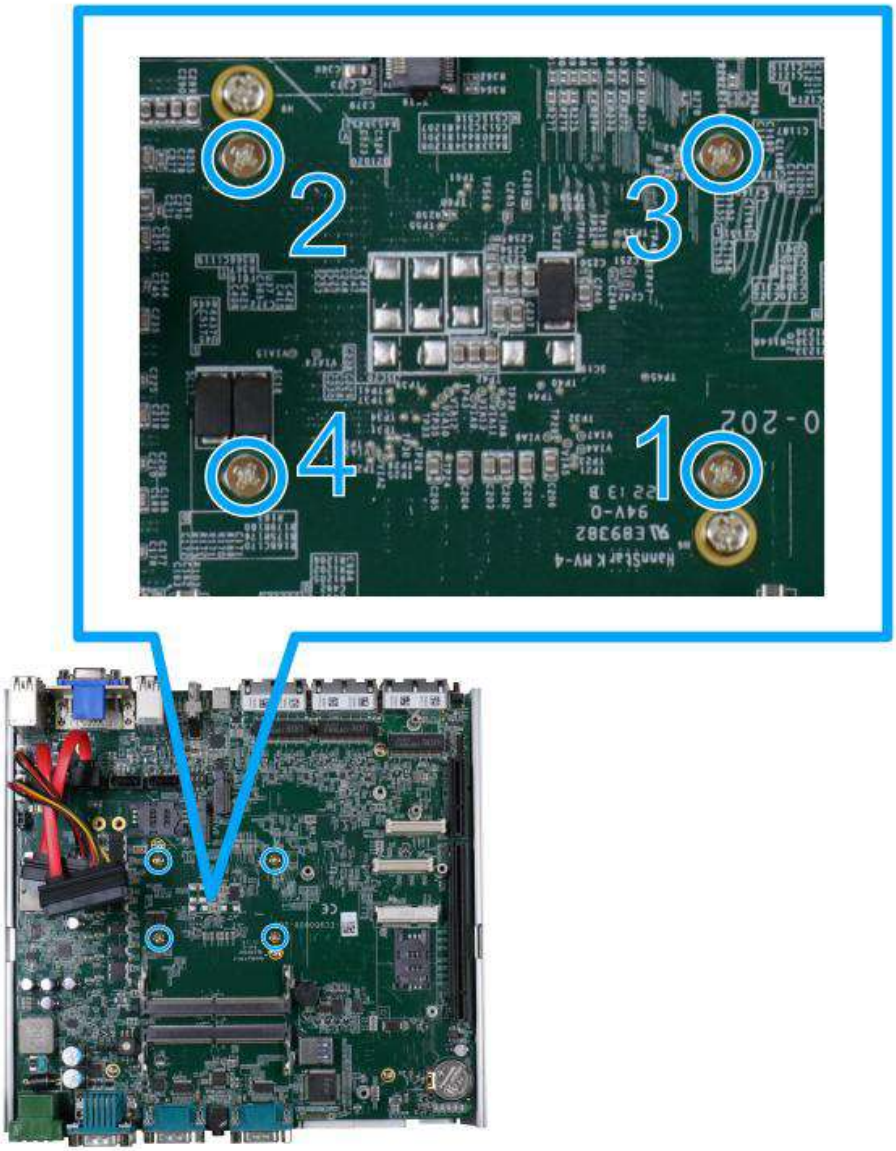

10. Reinstall the system panels, enclosure and Cassette module when done.

11. If you need to install other components, please refer to respective sections.

3.2.2 Remove and Replace the Existing CPU

1. To replace the existing CPU, you will need to separate the heatsink and the motherboard.

2. To do so, remove the eight screws indicated below.

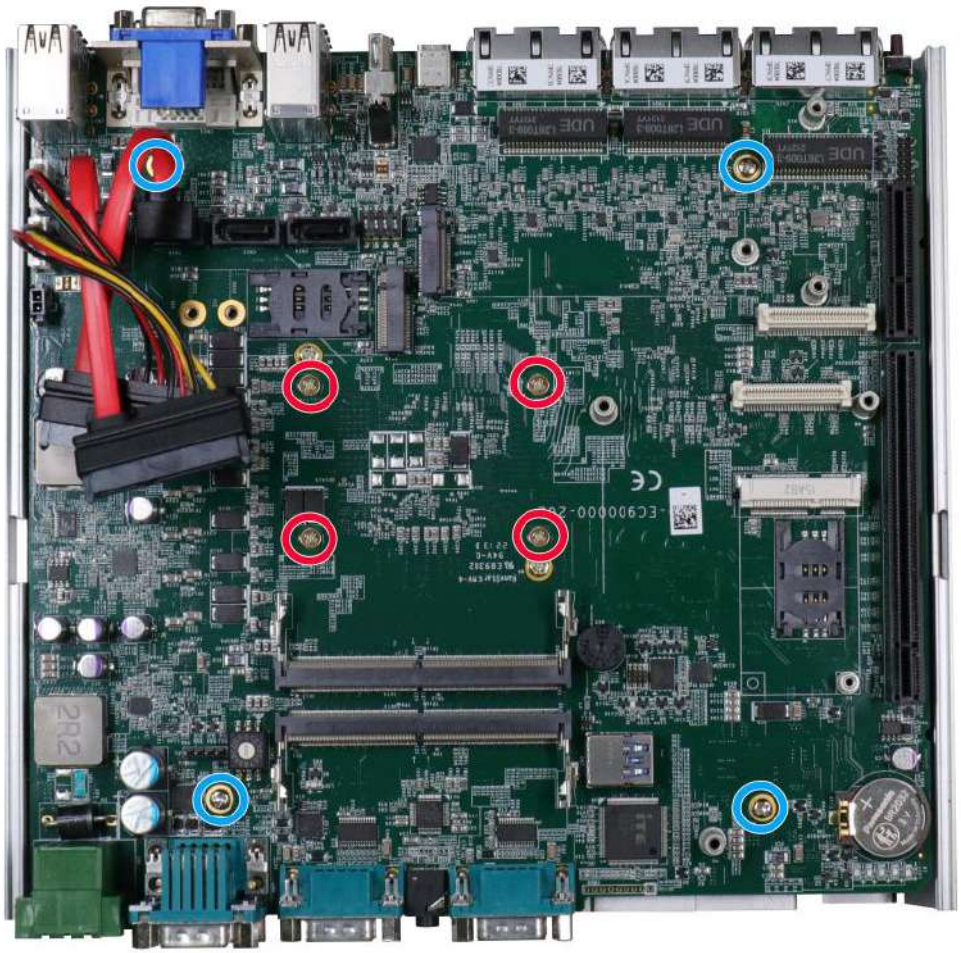

3. Remove the screws indicated once you separate the heatsink from the motherboard to remove the CPU holder.

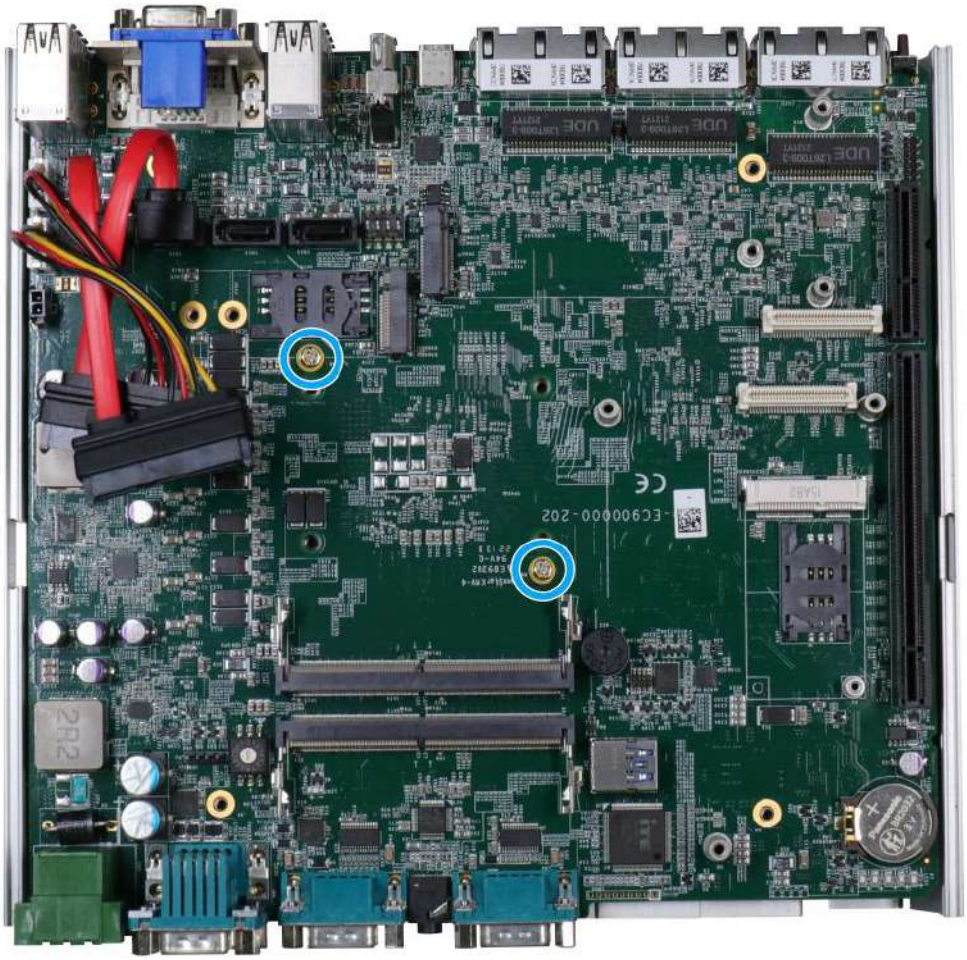

4. At this point, the CPU and retention bracket may be stuck onto the heatsink (due to the thermal pad). Please use a plastic pry tool and gentle separate the CPU/ holder from the heatsink.

WARNING

With the heatsink, CPU, and retention bracket removed, please be careful when handling the motherboard. DO NOT touch the pins in the LGA socket!

5. Gently separate the CPU from the retention bracket, and clean off any thermal pad residues on the heatsink and on the retention bracket.

CPU retention bracket (holder)

WARNING

With the CPU removed, please be careful when handling the motherboard. DO NOT touch the pins in the LGA socket!

6. Place a new CPU thermal pad (indicated in **blue**) onto the heatsink for the new CPU.

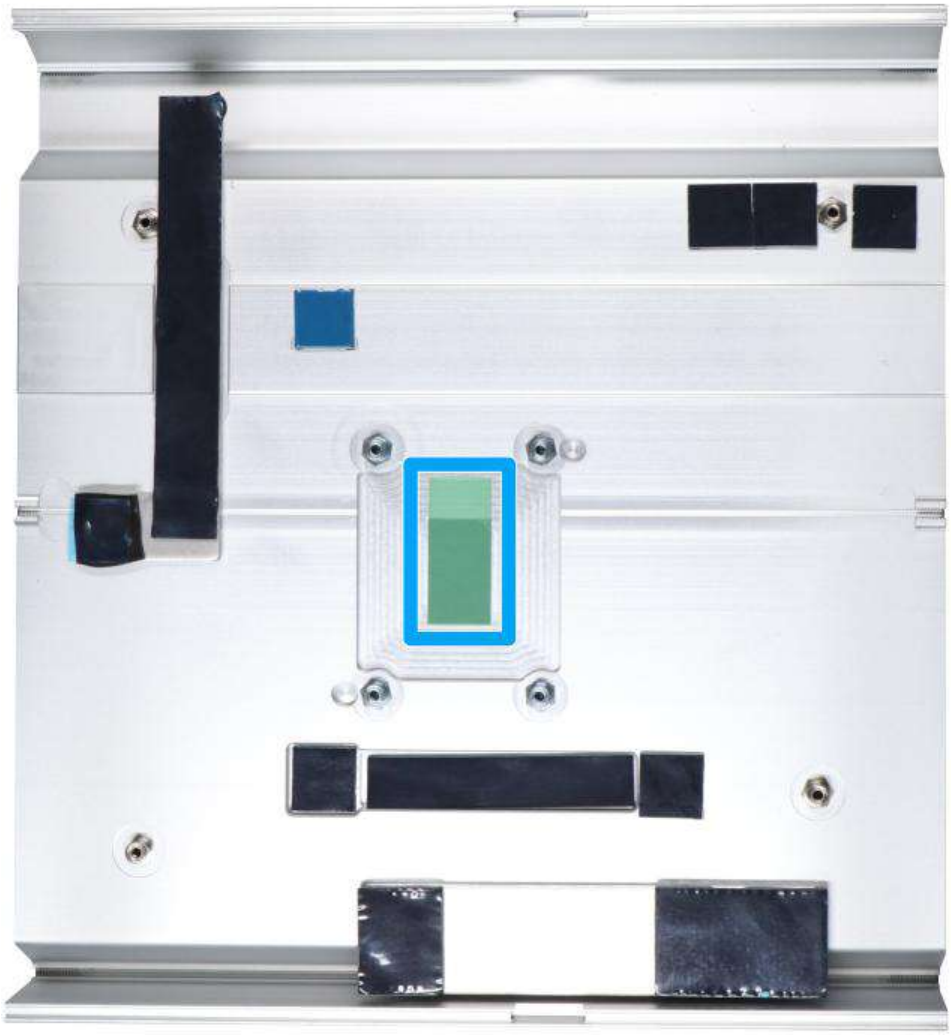

7. Remove and clean off any thermal pad residues around the socket/ motherboard. Gently place the new CPU into the socket by matching the four notches (indicated by **blues arrows**) on the side to the protrusions in the socket. Pay attention to the seating orientation, notice there is a short side (indicated by **green lines**), and a long side (indicated by **red lines**).

8. Make sure all thermal pad residues have been cleaned on both sides of the retention bracket. Place the CPU retention bracket (holder) on top of the CPU and hold it in place. Make sure the indicator triangle engraved on the CPU's integrated heat spreader (HIS) and the triangle indicator on the retention bracket are positioned in the same corner (indicated by **blue circles**).

9. Turn the motherboard around and secure the bracket by tightening two M3 P-head screws.

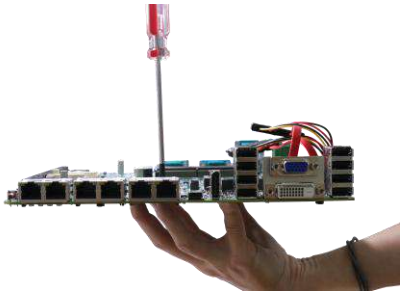

Hold CPU bracket firmly and turn the motherboard around

Secure two M3 P-head screws

10. Align the motherboard to the four standoffs on the heatsink, gently lower the motherboard onto the heatsink and secure with four screws.

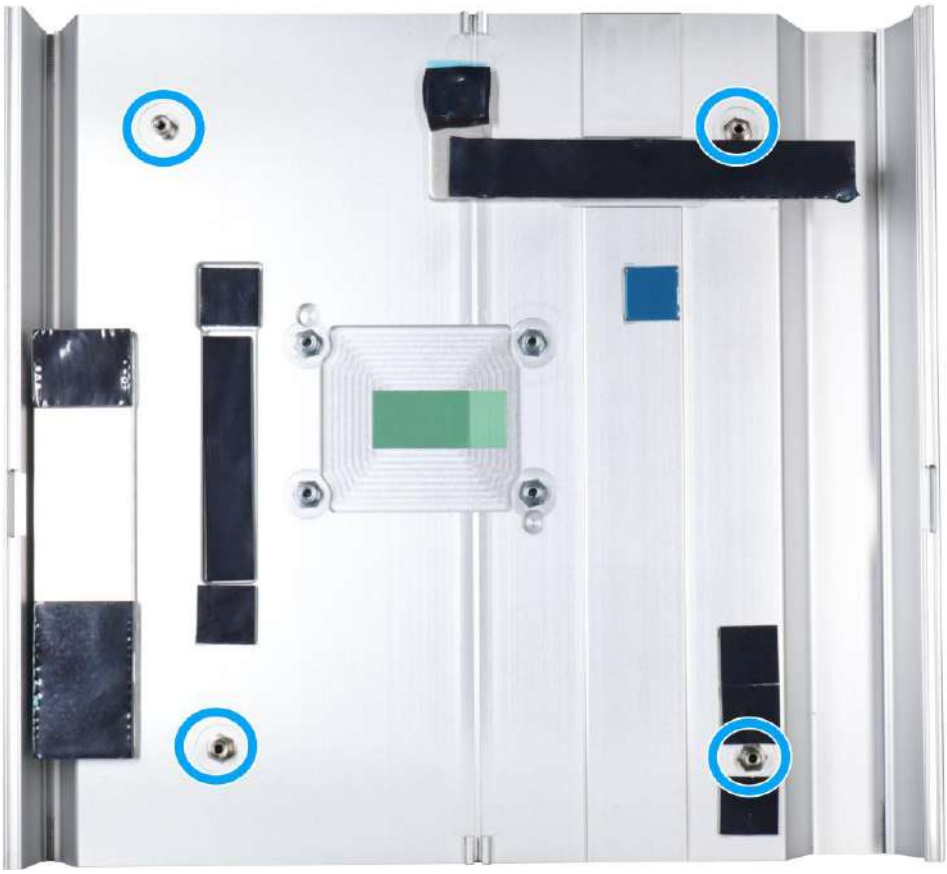

11. Once the motherboard has been installed, you're ready to secure the four screws that help the heatsink apply pressure to the CPU/ chipset die. You'll want to apply even pressure to the corners by gradually tightening each screw. Please refer to the recommended order when tightening the screws.

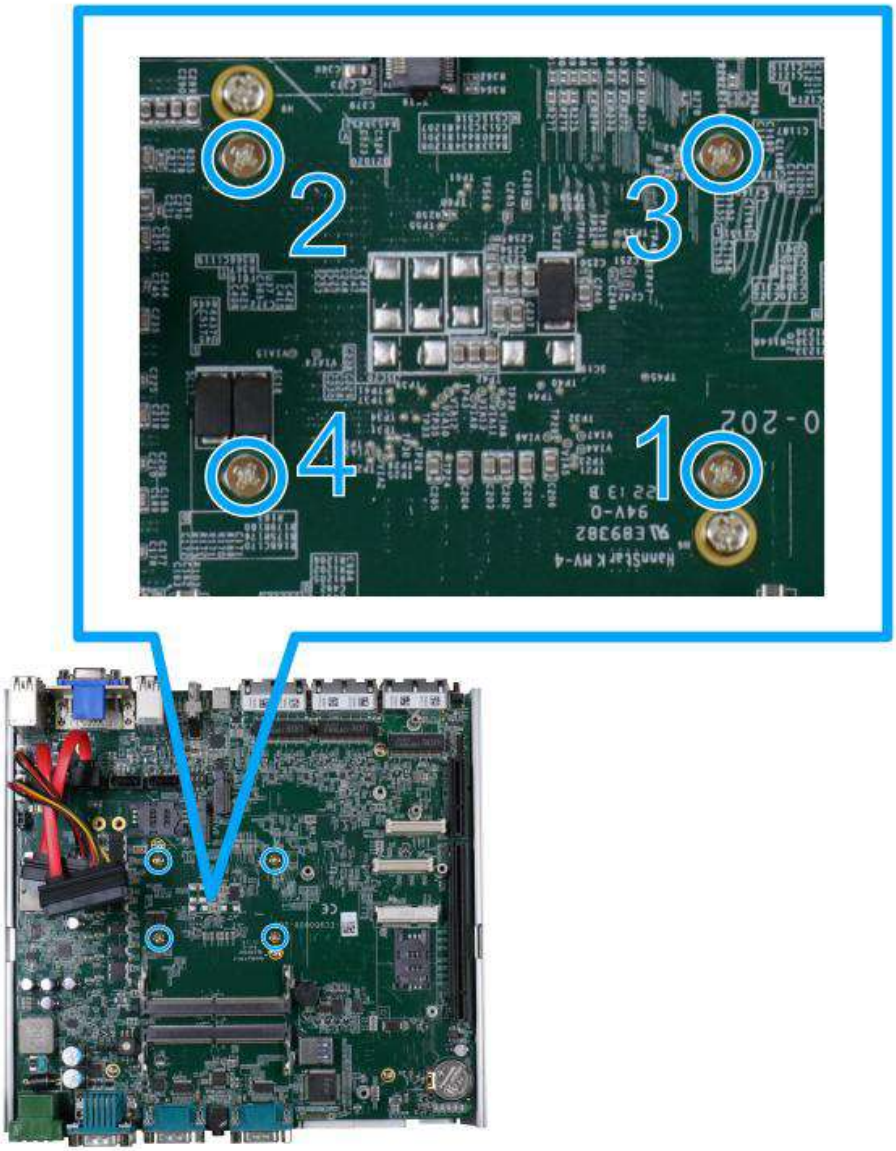

12. Reinstall the system panels, enclosure, and Cassette module when done.

13. If you need to install other components, please refer to respective sections.

3.2.3 DDR5 SO-DIMM Installation

There are two SO-DIMM memory slots (indicated in **blue**) on the motherboard that supports a total maximum of 128GB DDR5-4800. Please follow the procedures below to replace or install the memory modules.

1. Please refer to the section "Disassembling the System".
2. Locate the SODIMM memory module slots on the motherboard.

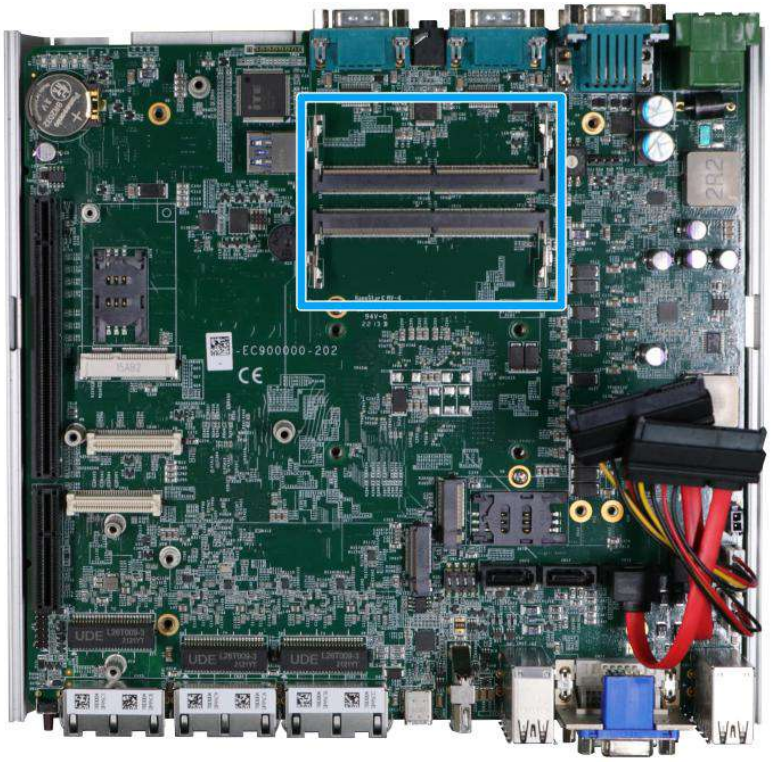

3. To install the memory module, insert gold fingers into the slot at 45-degree angle, push down on the memory module to clip the module into position.

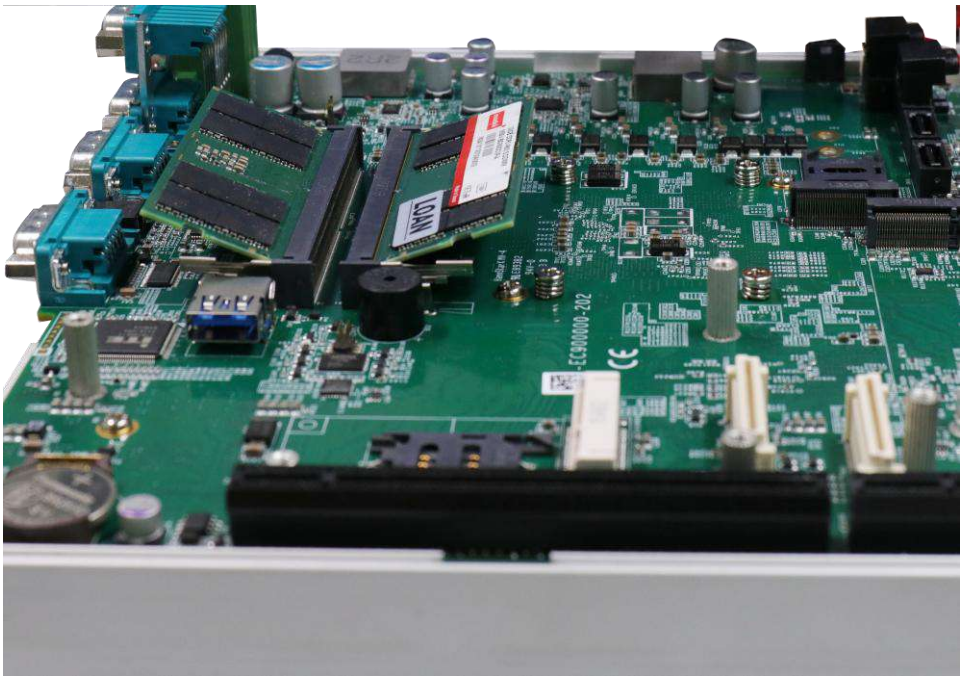

4. Push the memory module down until it is clipped-in.

5. Repeat steps 3 and 4 to install the other module.

6. Before you reinstall the system enclosure, please remove the respective thermal pad protective film located on the enclosure's bottom panel.

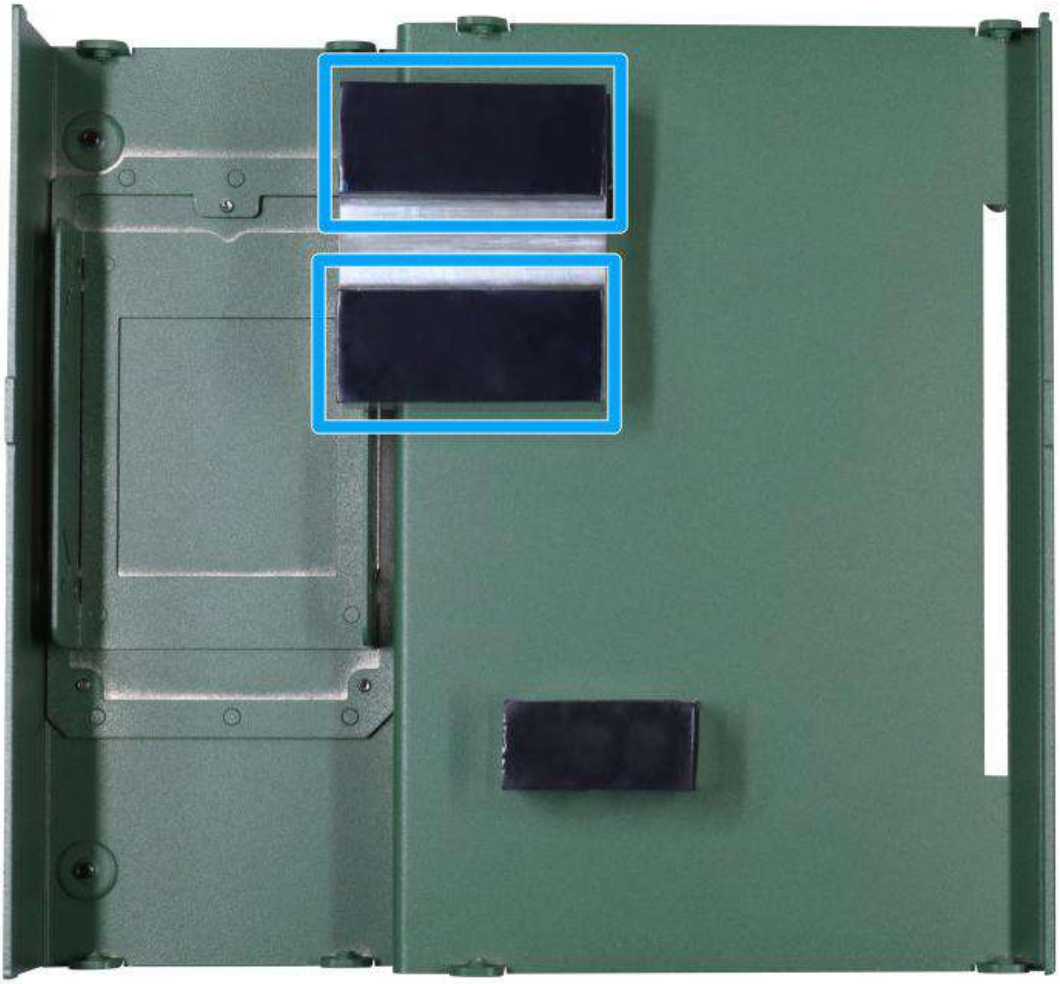

7. Reinstall the system enclosure and panel when done.

8. If you need to install other components, please refer to respective sections.

3.2.4 mPCIe Module, Mini-SIM (2FF) Card and Antenna Installation

The system has an mPCIe slot (indicated in **blue)** coupled with Mini-SIM socket (indicated in **red**) for installing 3G/ 4G module. For installation, please refer to the following instructions.

1. Please refer to the section "Disassembling the System".
2. Locate the mPCIe and SIM card slots on the motherboard.

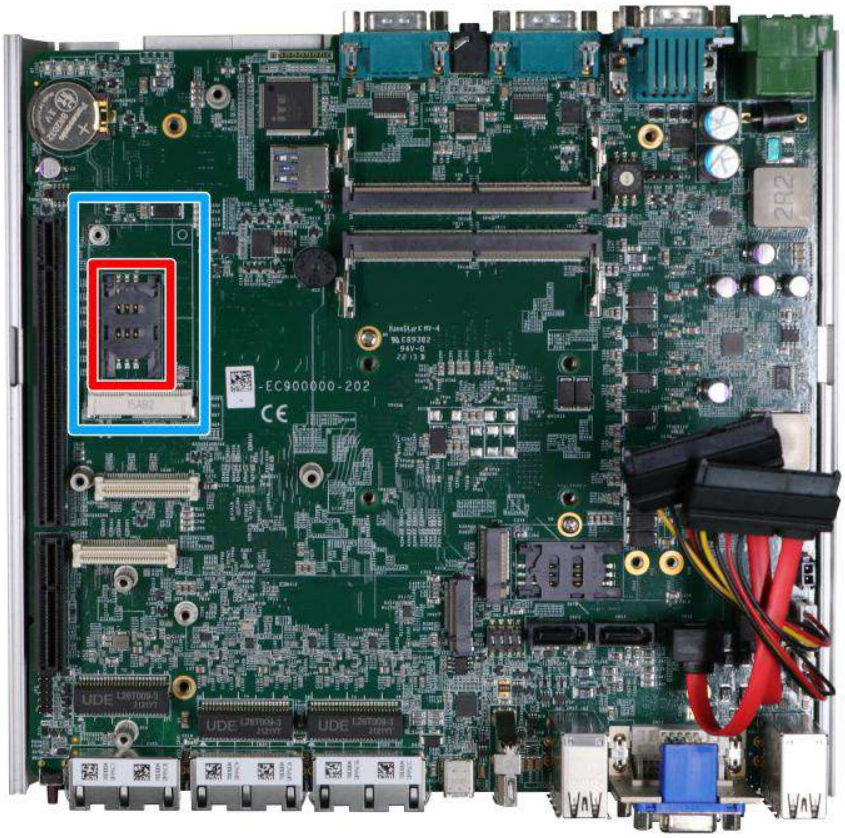

3. Before installing the mPCIe module, you need to insert the Mini-SIM card. Slide the SIM slot holder and lift the SIM card holder. Insert the Mini-SIM card (pins facing up), shut the SIM holder and slide it to lock the SIM card in-place.

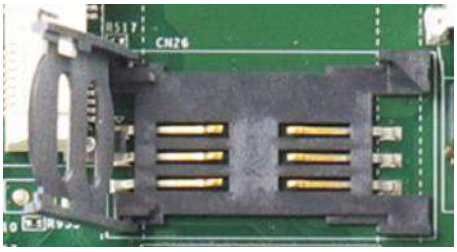

Slide and lift SIM card holder

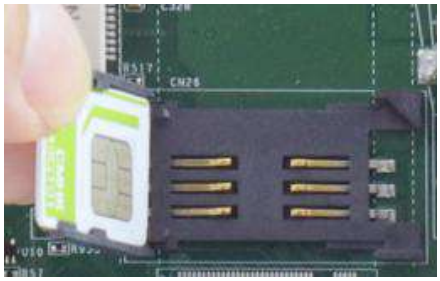

Insert Mini-SIM card with pins facing up

4. Secure the Mini-SIM card by sliding the holder.

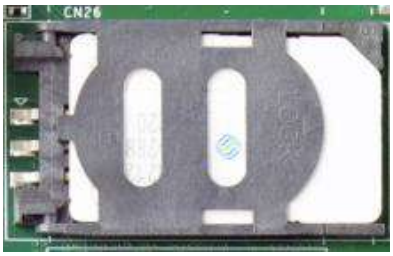

5. Insert the mPCIe module on a 45-degree angle into the mPCIe slot and secure the module.

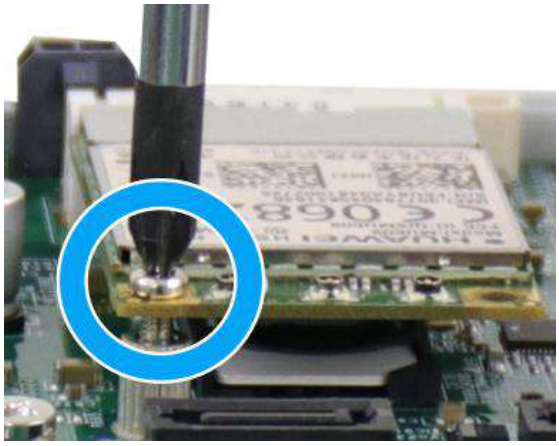

Insert on 45-degree angle **Secure the module**

6. Clip on the IPEX-to-SMA cable to the module and secure the antenna to the front or rear panel. Please refer to the module's manual for clip-on connection.

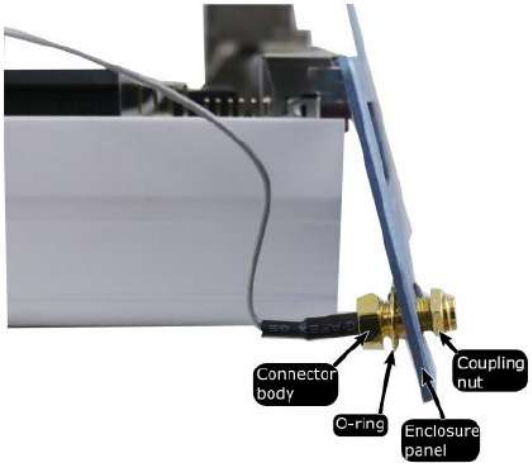

Clip on IPEX-to-SMA cable **Secure antenna to rear panel**

7. Reinstall the system enclosure and panel when done.

8. If you need to install other components, please refer to respective sections.

3.2.5 M.2 2242/ 3042/ 3052 (B Key) Module and Micro-SIM (3FF) Card Installation

The system has an M.2 slot (indicated in **blue rectangle**) for installing 5G/ 4G with a micro-SIM card (indicated in **red rectangle**) or a WiFi module card slots. For installation, please refer to the following instructions.

1. Please refer to the section "Disassembling the System".
2. Locate the M.2 2242/ 3042/ 3052 (B Key) and SIM card slots on the motherboard. A copper standoff is provided for you to secure onto the motherboard into the **red arrow** location for an M.2 2242/ 3042 module, or into the **blue arrow** location for an M.2 3052 module.

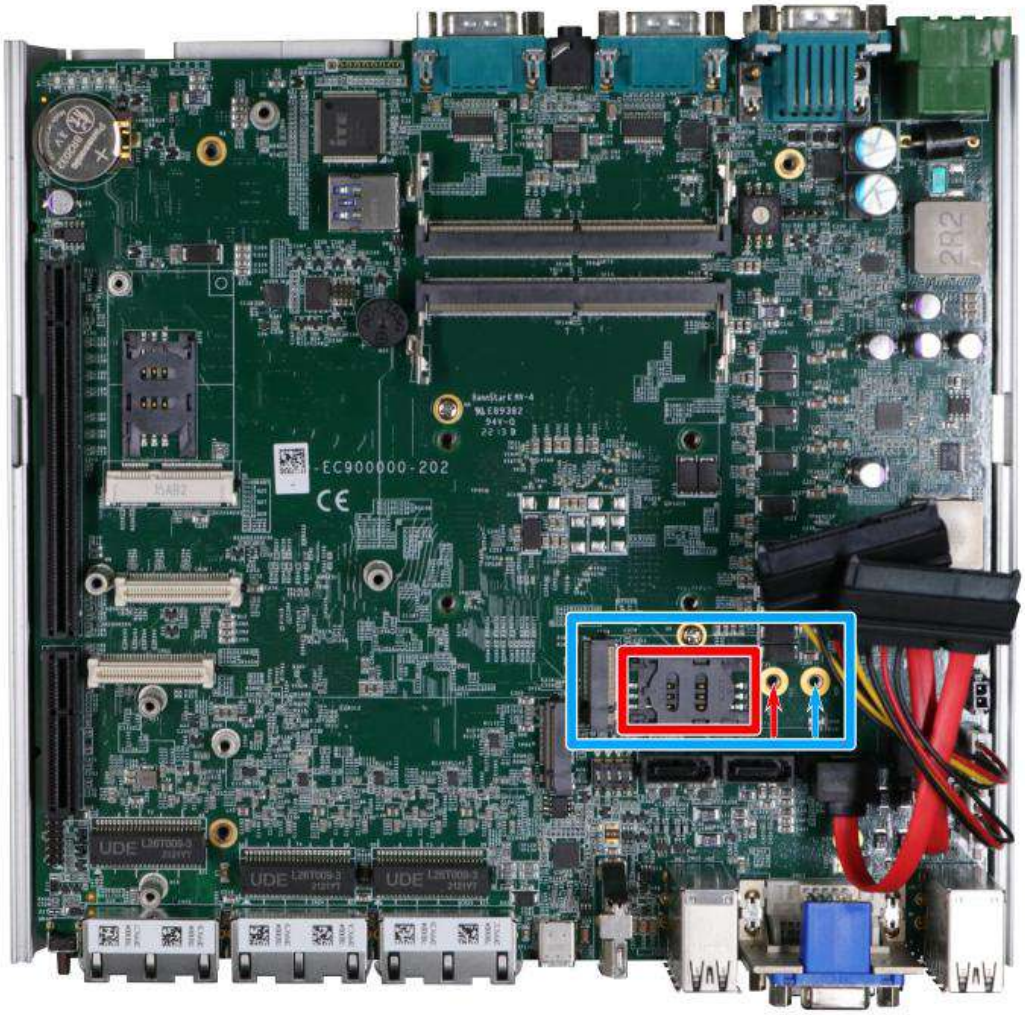

3. Insert the module on a 45 degree angle.

4. Gently press down and secure the module with an M2.5 P-head screw.

5. Clip on the IPEX-to-SMA cable to the module and secure the antenna to the front or rear panel. Please refer to the module's manual for clip-on connection.

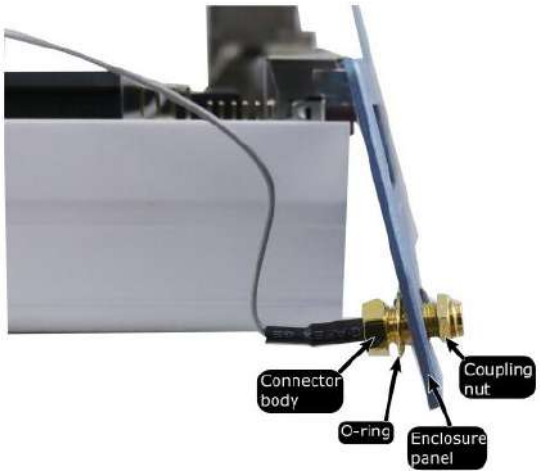

Clip on IPEX-to-SMA cable **Secure antenna to rear panel**

6. Reinstall the system enclosure and panel when done.
7. If you need to install other components, please refer to respective sections.

3.2.6 M.2 2280 NVMe SSD Installation

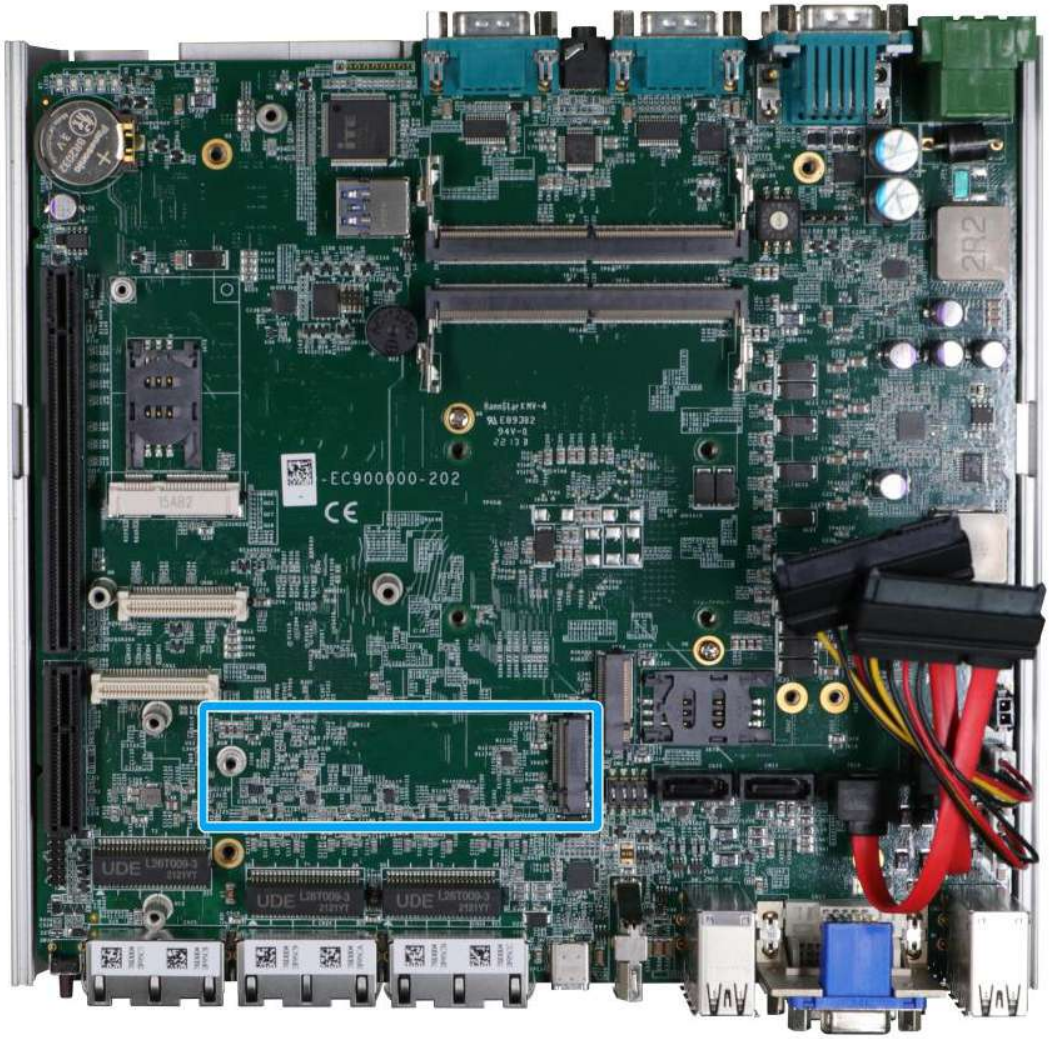

The system has a Gen4 x4 PCIe M.2 2280 slot for you to install an NVMe SSD. For installation, please refer to the following instructions.

1. Please refer to the section "Disassembling the System", you may not need to completely dismantle the system to gain access to the M.2 slot.
2. Insert the module on a 45 degree angle.

3. Gently press down and secure the module with an M2.5 P-head screw.

4. Remove the thermal pad's protective film at the bottom of the enclosure panel for the NVMe module.

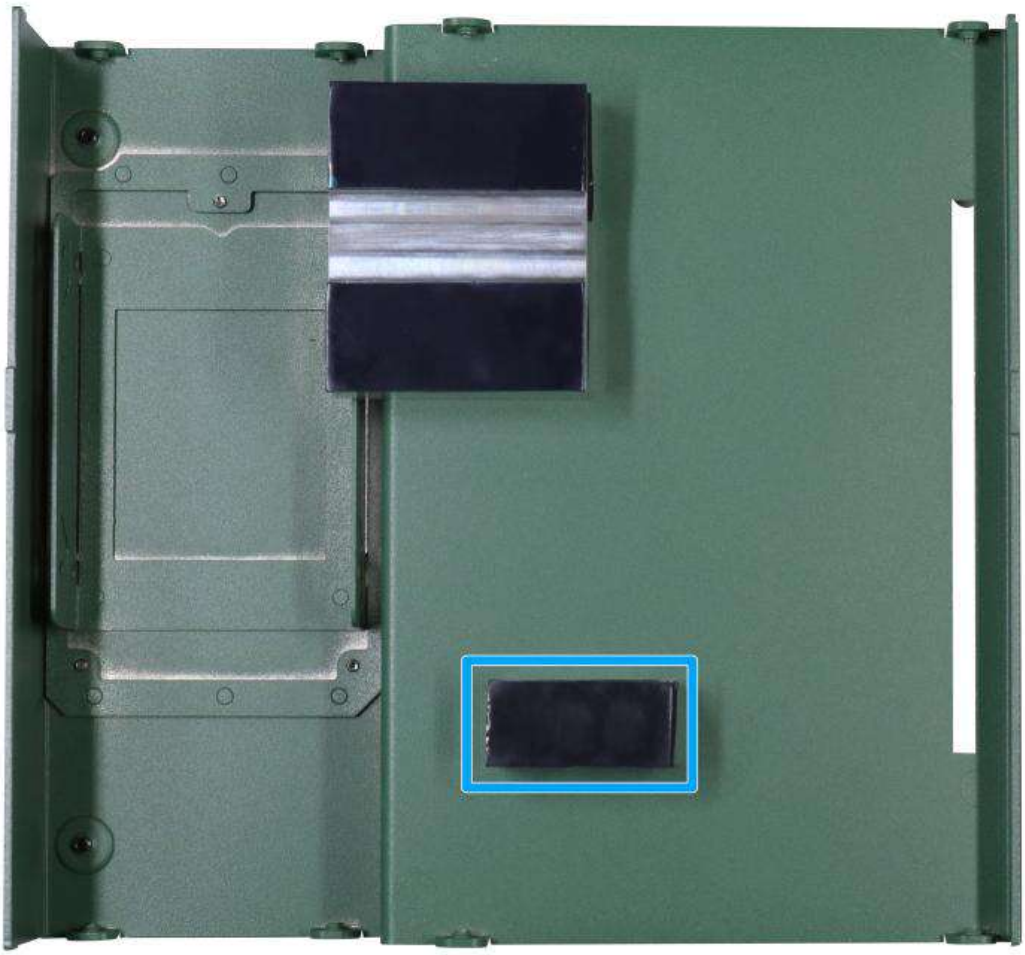

5. Reinstall the system enclosure and panel when done.

6. If you need to install other components, please refer to respective sections.

3.2.7 MezIO® Module Installation

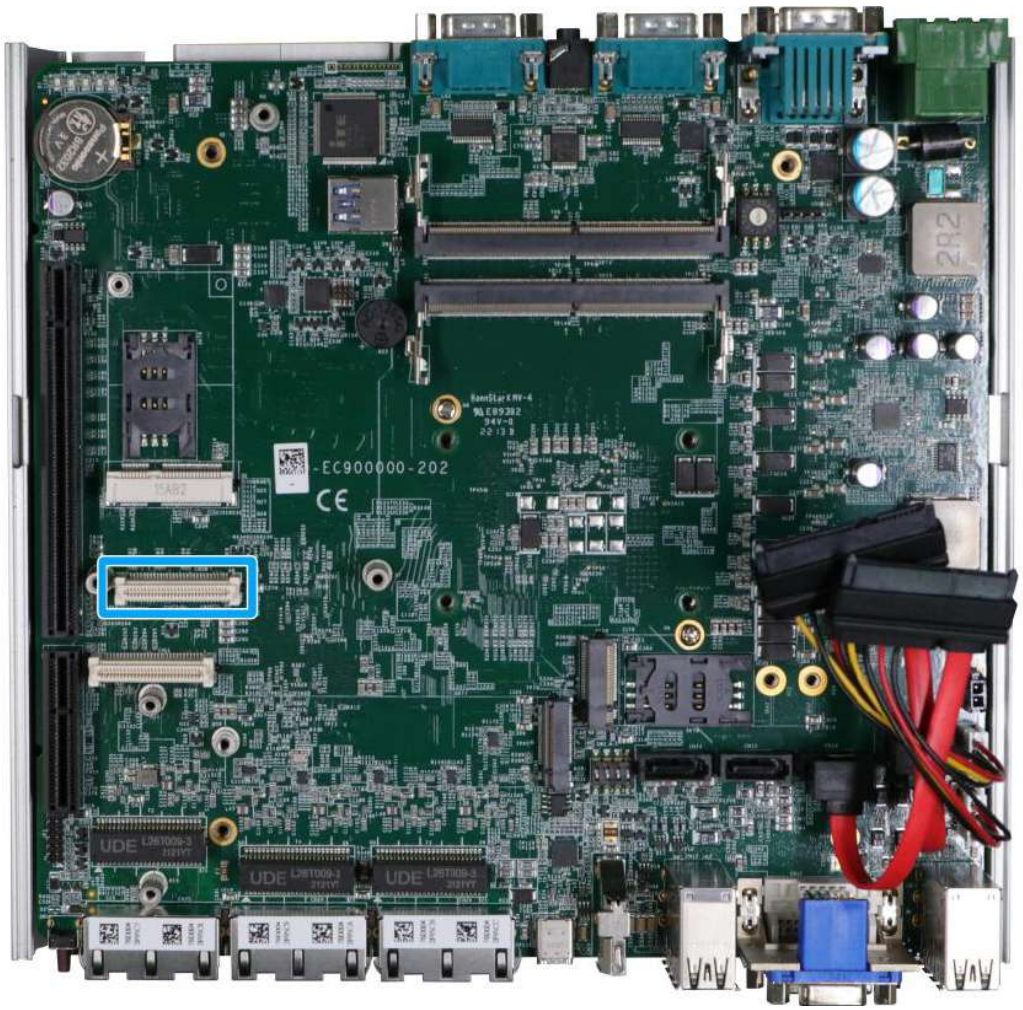

MezIO® is an innovative interface designed for integrating application-oriented I/O functions into an embedded system. It offers computer signals, power rails and control signals via a high-speed connector. MezIO® is also mechanically reliable benefited from its 3-point mounted mezzanine structure. A MezIO® module can leverage these signals to implement comprehensive I/O functions.

The system incorporates MezIO® interface and universal mechanical design to accommodate Neousys' standard MezIO® modules. For customers who want to develop their own MezIO® module, Neousys provides MezIO® design documents on an NDA basis. Please contact Neousys for further information.

1. Please refer to the section "Disassembling the System", you may not need to completely dismantle the system to gain access to the MezIO® interface.

2. The MezIO® module is secured by the three stand-mounts indicated in the illustration below.

3. Gently lower the MezIO® module onto the three stand-mounts while matching the MezIO® interface. Secure the module using three screws supplied.

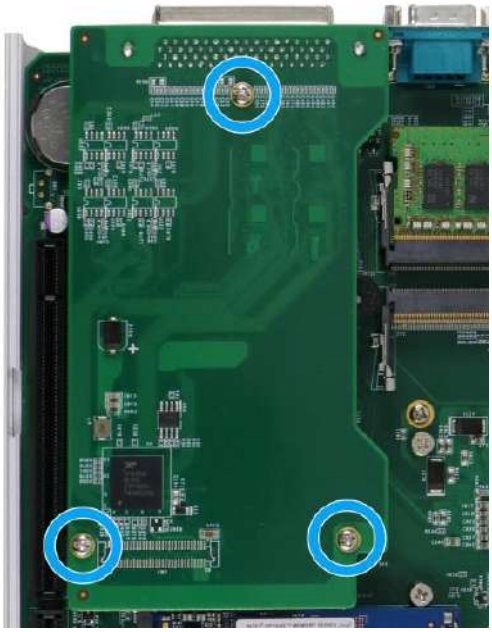

4. Reinstall the system enclosure and panel when done.

5. If you need to install other components, please refer to respective sections.

3.3 Installing the System Enclosure

1. To reinstall the system enclosure, place the bottom panel on top of the motherboard while making sure both sides are inserted into the heatsink (indicated in **blue**).

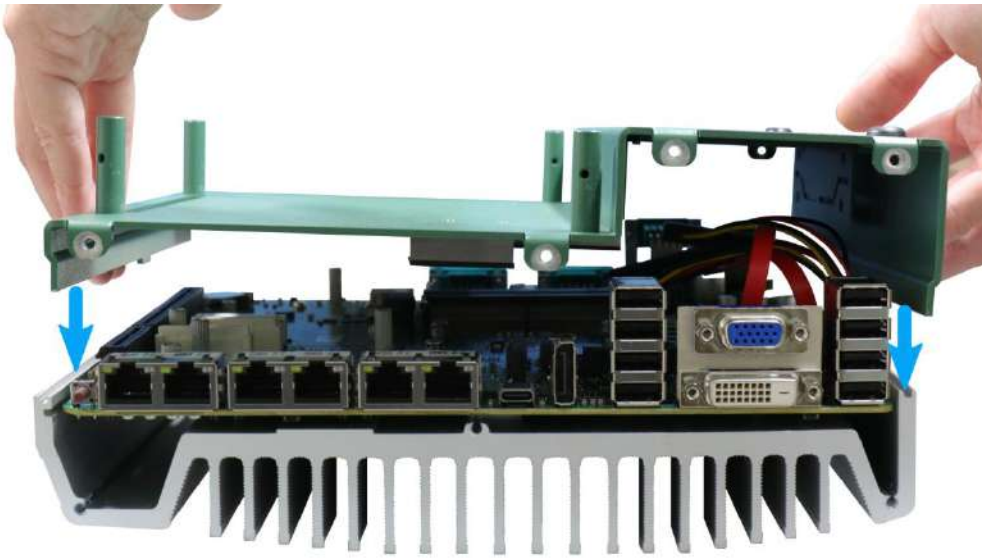

2. Install the front panel and secure screws indicated in **blue**.

Nuvo-9000E/ P/ DE systems

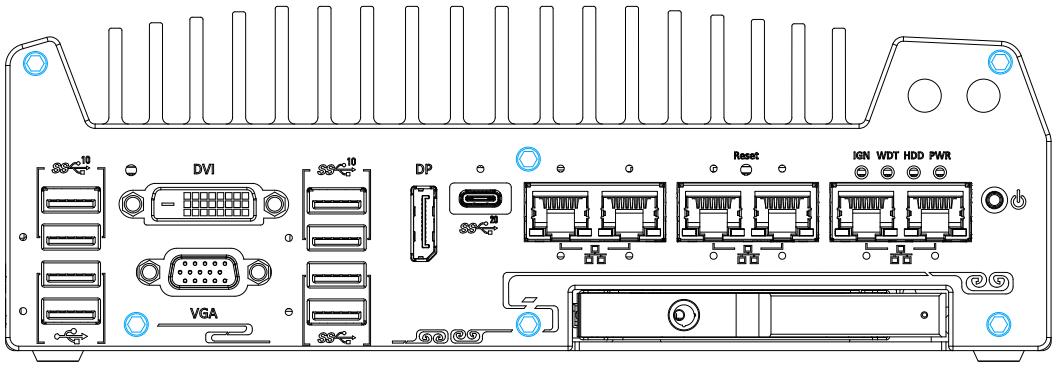

Nuvo-9000LP systems

3. Install the rear panel and secure screws indicated in **blue**.

Nuvo-9000E/ P/ DE systems

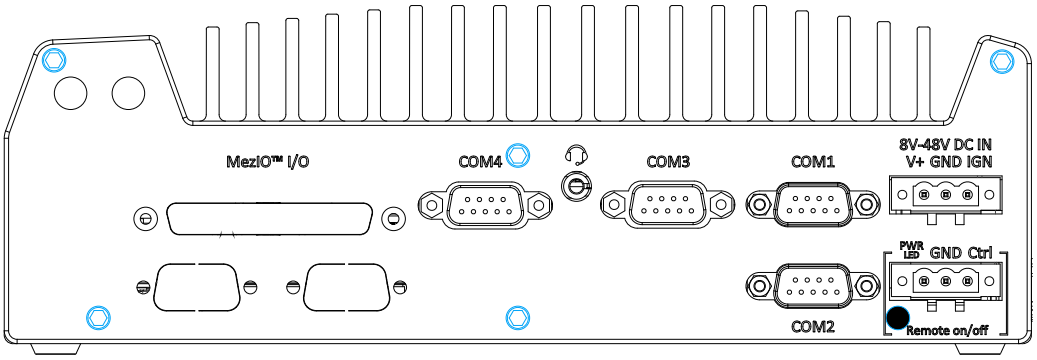

Nuvo-9000LP systems

4. Install the Cassette module and secure screws indicated in **blue**.

> **NOTE**
>
> *Not applicable to Nuvo-9000LP systems.*

Install the Cassette module

Secure the screws indicated

3.4 HDD/ SSD Installation

NOTE

Supports up to 15mm thickness HDD/ SSD.

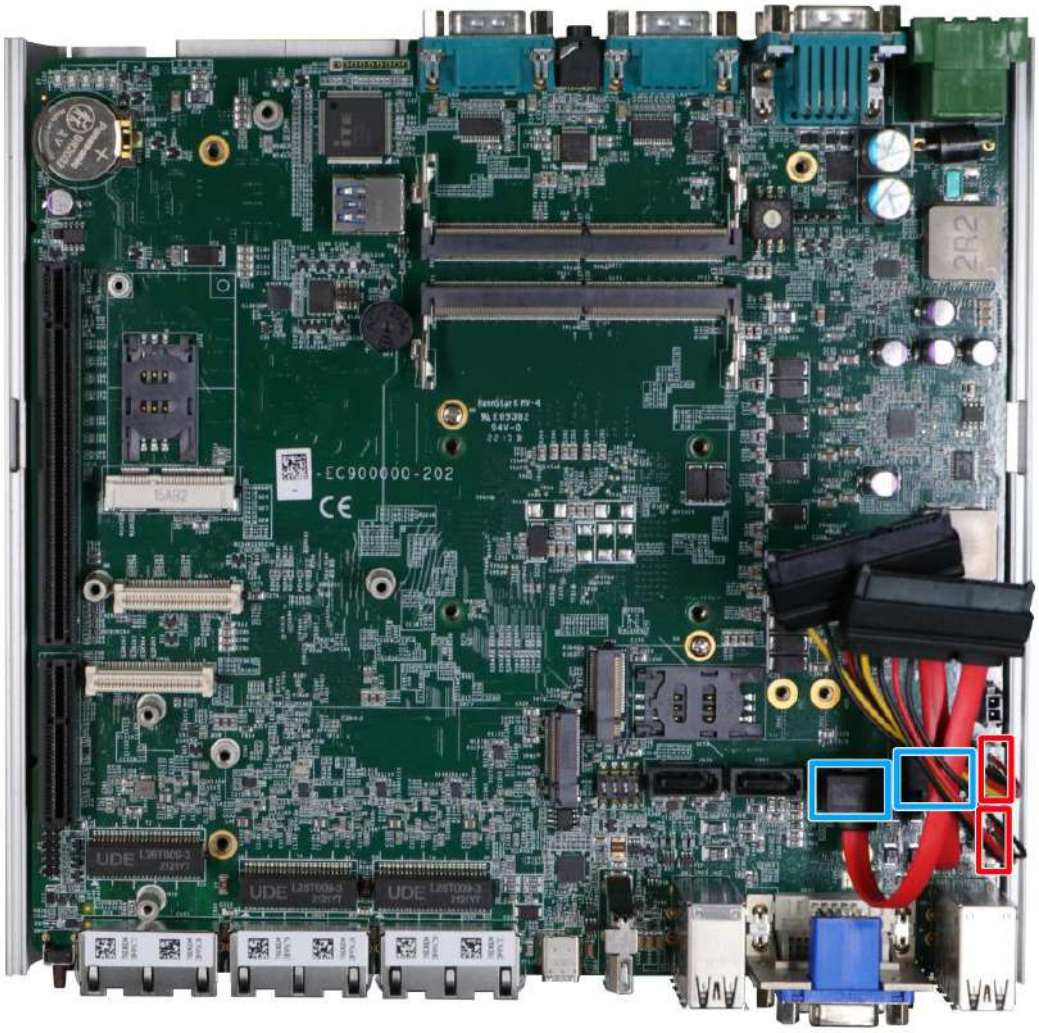

The system has two SATA ports (indicated in **blue)** and two four pin power connectors (indicated in **red**). The SATA and power cables should already be connected on the motherboard so users only need to install the HDD/ SSD. Please refer to the following instructions on how to install 2.5” SATA HDD/SSD.

1. Turn the system upside-down and remove the three screws indicated in the illustration below and lift the tray out of the system.

2. Take the HDD/ SSD thermal pad (if not already attached) out of the accessory box and place it in the middle of the tray. Remove the protective film covering the HDD/ SSD thermal pad.

NOTE

The tray for Nuvo-9000E/ P/ DE can support the installation of two disk drives.

The tray for Nuvo-9000LP can support the installation of one disk drive.

3. Place the HDD/ SSD (with labels facing up) and match the SATA connector end to the side with two screw holes (indicated in **blue**), secure the HDD/ SSD with the supplied flathead screws (4 per drive). Connect the 22-pin SATA cable to the installed HDD/ SSD.

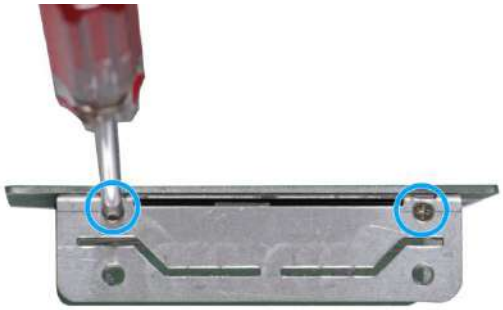

2 screws on each side per HDD/ SSD

HDD/SSD tray installation orientation

4. Gently put the tray back into the system with the connector side being inserted into the system first and secure the tray with three screws.

Reinsert the tray

Securing the tray

5. If you need to install other components, please refer to respective sections.

3.5 2.5” Hot-swappable Tray HDD/SSD Installation (Nuvo-9000LP Only)

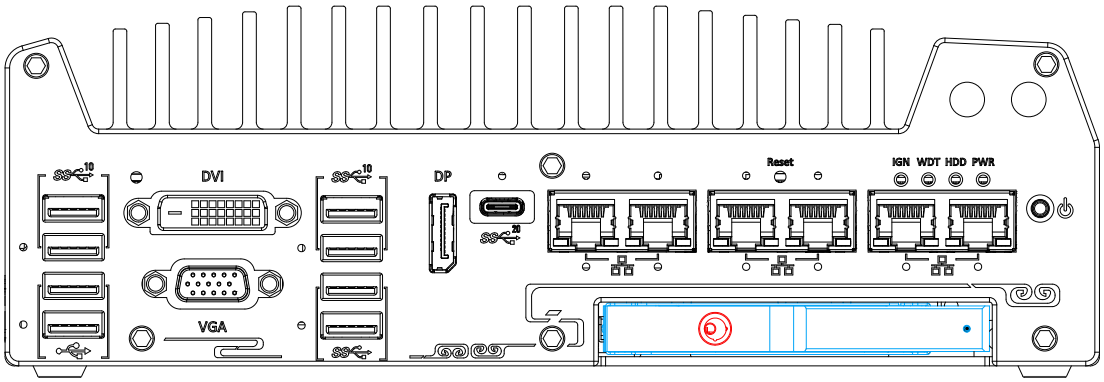

The system features a 2.5” external hot-swappable HDD/ SSD slot (indicated in **blue**), and secured by a lock (indicated in **red**). It coincides with the internal drive and can be configured into RAID 0 or 1 storage. To install HDD/ SSD into the 2.5” external hot-swappable slot, please refer to the following procedure:

1. Pull the handle on the 2.5” external hot-swappable slot to open it.

Pull handle

Open slot door

2. With the label side facing upward, insert the SATA connector side of the 2.5” HDD/ SSD into the slot first. You may feel resistance when the SATA connectors meet, push it firmly until the 2.5” HDD/ SSD is fully inserted into the slot.

3. Push the handle into the 2.5” slot until it snaps into position. A key is provided (in accessory box) to lock the external slot.

Key in accessory box

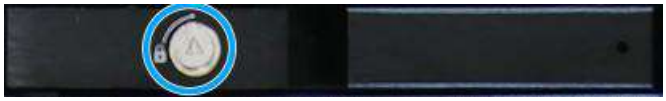

2.5” HDD/ SSD slot lock

3.6 Ethernet/ PoE+ Port Panel Screw Fix

The system's RJ45 Ethernet ports have panel screw fix holes (indicated in blue circles) to secure the cable connection.

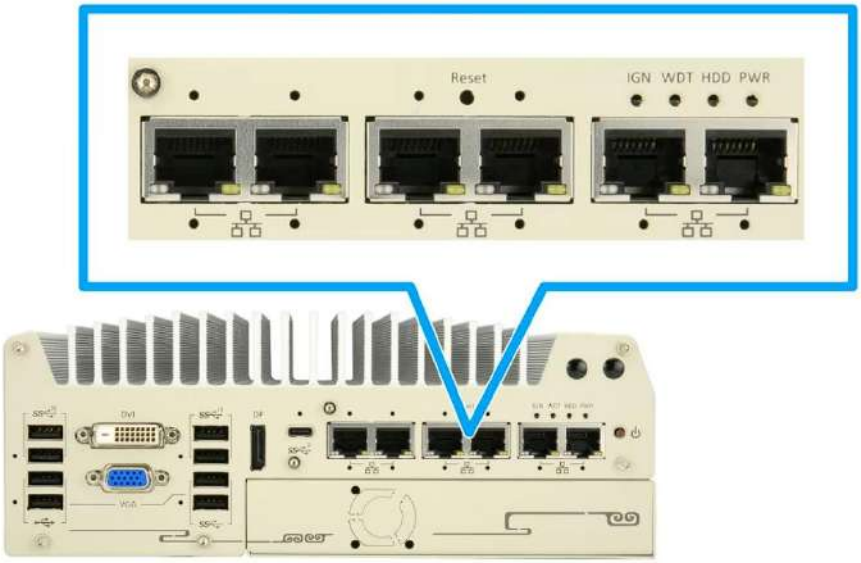

1. To install and make use to the panel screw fix connection, you must acquire panel screw fix cables such as the cable shown below.

2. Simply insert the RJ45 connector into the RJ45 port and secure the top and bottom screws using your fingers or a screw driver.

NOTE

Ports 5 and 6 have only the bottom panel screw fix hole.

3.7 PCIe/ PCI Card Installation into Cassette Module (Nuvo-9000E/ P/ DE Only)

NOTE

Nuvo-9000E/ P and Nuvo-9000DE systems' Cassette module share the exact same screw locations and removal procedure, therefore a Nuvo-9000E/ P will be used for demonstration.

The Cassette module provides a separated compartment to accommodate add-on card(s). It compartmentalizes the heat generated and effectively manages thermal conditions of both the system and add-on card(s). The modular design reduces the complexity of installing and replacing add-on card(s) in the fanless controller. In addition, the mechanical design creates a sealed wind tunnel to bring in cold air and expels hot air via a system fan to offer the system extreme stability and reliability.

To install a PCIe/ PCI card into the Cassette module, please refer to the following procedure:

1. Turn the system upside-down and remove the four screws.

2. Gently wiggle the Cassette module and separate it from the system enclosure.

3. Remove the screw to open the Cassette cover.

4. Before installing the PCI/ PCIe card into the Cassette module, it is recommended to attach the rubber spacers provided onto the back of the card to avoid possible contact with the enclosure. Simply attach the rubber spacers on the back of the card, in the four corners. **DO NOT** attach them on any components, please remove the protective film on each rubber spacer (indicated in **blue**), and attach them to the PCBA.

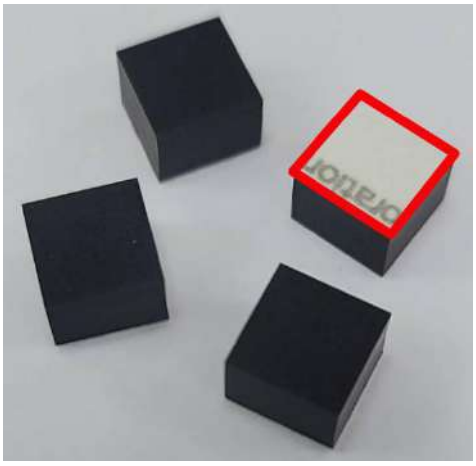

Rubber stands, remove each protective film (indicated in **red**) before attaching to the card

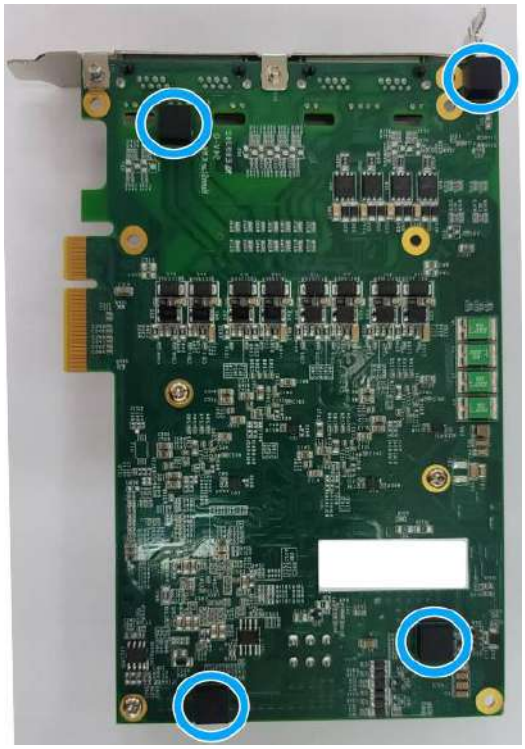

Attach the rubber stands on the back of the PCBA.

5. Remove the bezel cover (indicated in **blue circle**) and insert the card into the PCIe/ PCI slot while making sure the bezel is properly inserted into the notch and the card is secured in place with screw.

NOTE

Repeat the procedure for installing a second card into a Nuvo-9000DE series system.

Remove bezel cover and insert the card

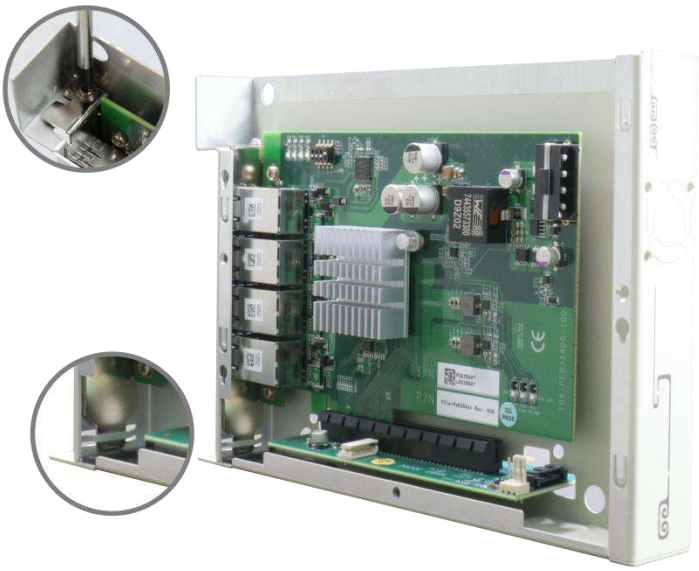

Make sure the card is inserted into the notch and secured with a screw

6. Secure the screw indicated.

7. Gently lower the Cassette module back onto the system enclosure and secure the module onto the system enclosure by securing the following screws.

3.8 Wall Mount Bracket/ DIN-rail Installation

Nuvo-9000 series ships with dedicated wall mount and DIN-rail (optional).

> **NOTE**
>
> *You will need to remove the four (4) rubber stands at the bottom of the enclosure if they have been attached.*

3.8.1 Wall Mount Bracket Installation

To install the system as a wall mount device, please refer to the following instructions.

1. Take out the two wall mount brackets (indicated in **blue**) and four M4 screws out of the accessory box. Fix the wall mount brackets to the system enclosure using M4 screws (indicated in **red**).

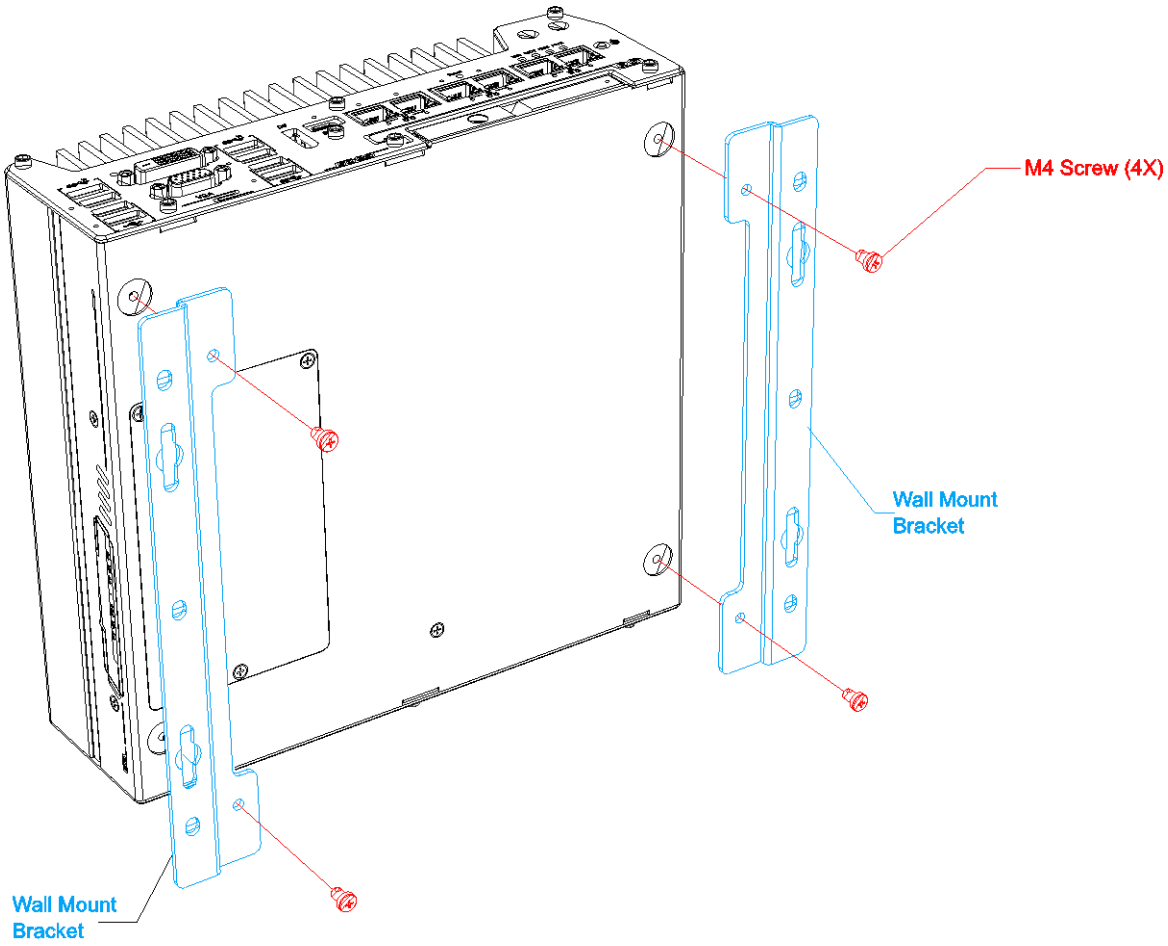

2. Place the system on a flat surface portion of the wall and secure it with four (4) M4 screws.

3. When wall mounting, place the heatsink fins perpendicular to the ground for better heat dissipation efficiency.

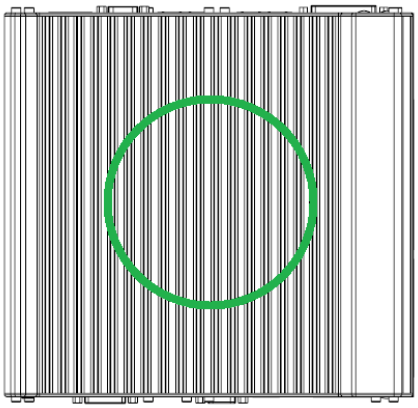

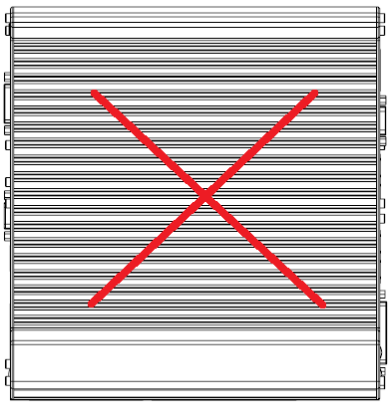

3.8.2 DIN-rail Installation (Optional)

The system also has an optional DIN-rail mounting kit. The kit includes a bracket (in **blue**) and a DIN-rail mounting clip (in **red**). By fixing the clip to the bracket using four M4 flat-head screws and fixing the bracket assembly to the system four M4 screws (in **green**), complete the installation by clipping the system onto the DIN rail. This option may be useful if you want to deploy it inside an equipment cabinet where DIN rail is available.

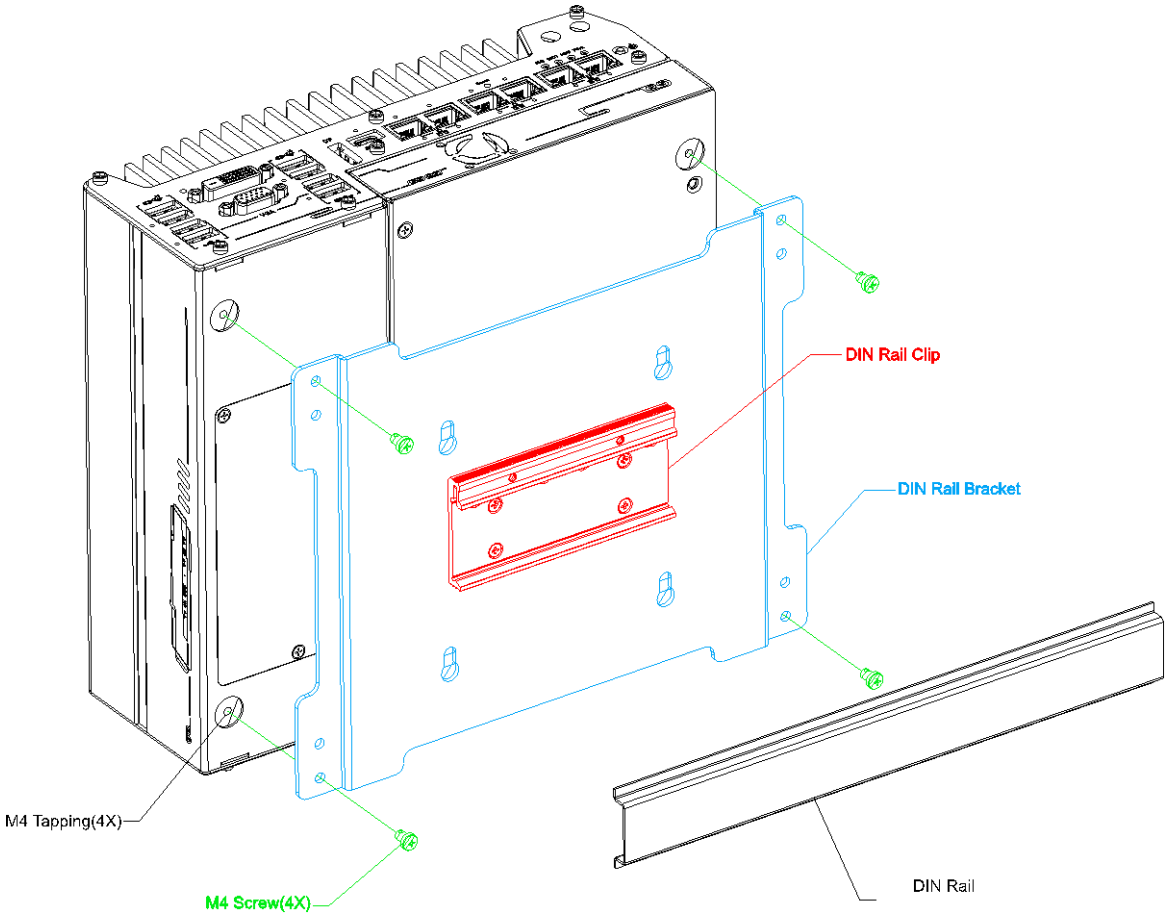

3.9 Powering On the System

There are three methods to power on the system

- Pressing the power button
- Using an external non-latched switch by connecting to the remote on/ off plug
- Sending a LAN packet via Ethernet (Wake-on-LAN)

3.9.1 Powering On Using the Power Button

This is the simplest way to turn on your system. The power button on the front panel is a non-latched switch and behaves as the ATX-mode on/off control. With DC power connected, pushing the power button will turn on the system and the PWR LED indicator will light up. Pushing the button when system is on will turn off the system. If your operating system supports ATX power mode (i.e. Microsoft Windows or Linux), pushing the power button while the system is in operation will result in a pre-defined system behavior, such as shutdown or hibernation.

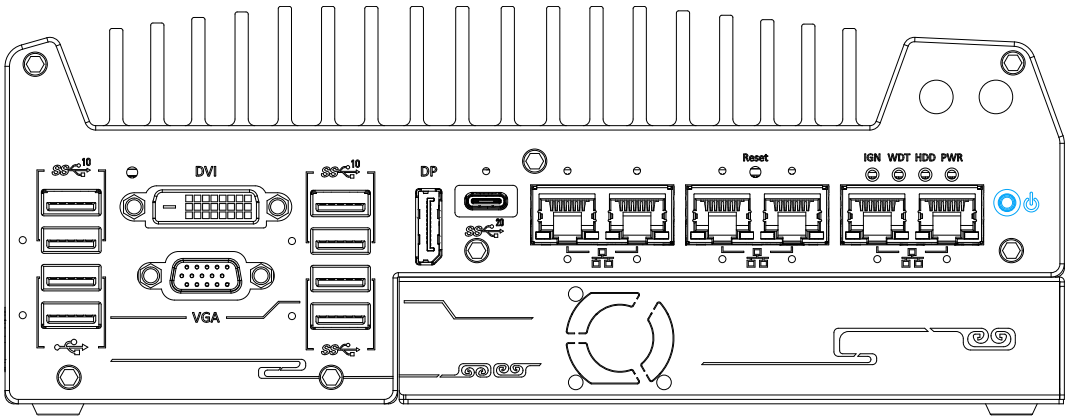

3.9.2 Powering On Using External Non-latched Switch

If your application demands the system to be placed inside a cabinet, you may use an external non-latched switch to power on/ off the system. The system provides a 3-pin “Remote On/ Off” plug for connecting a non-latched switch and acts as the ATX-mode power on/off control switch. The external non-latched switch acts the same as the power button on the front panel. To setup and power on/ off the system using an external non-latched switch (ATX-mode), please follow the steps described below.

1. Acquire a non-latched switch with 3-pin plug.

2. Connect the non-latched switch to the Remote on/ off plug (Ctrl and GND pins).

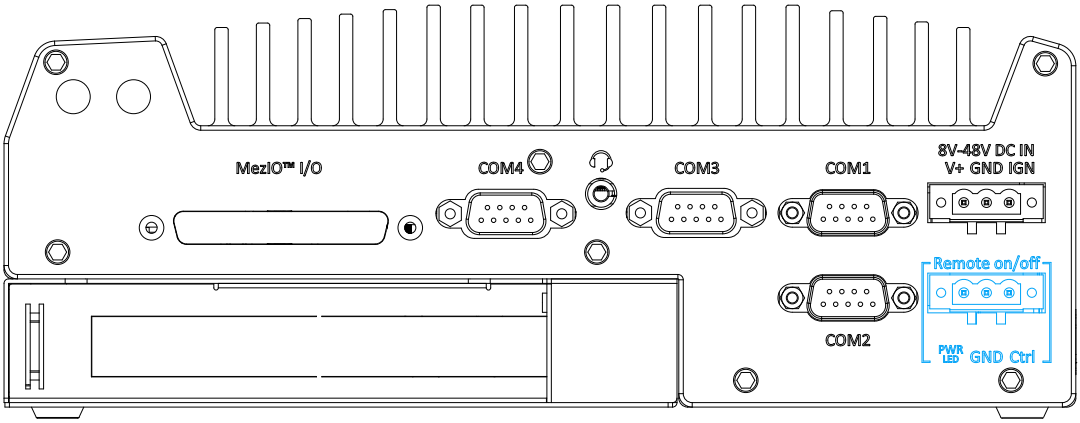

3. With DC power connected, pushing the power button will turn on the system and the PWR LED indicator will light up. Pushing the button when system is on will turn off the system. If your operating system supports ATX power mode (i.e. Microsoft Windows or Linux), pushing the power button while the system is in operation will result in a pre-defined system behavior, such as shutdown or hibernation.

3.9.3 Powering On Using Wake-on-LAN

Wake-on-LAN (WOL) is a mechanism to wake up a computer system from a S5 (system off with standby power) state via issuing a magic packet. The system's Wake-on-LAN compatible GbE port is shown below.

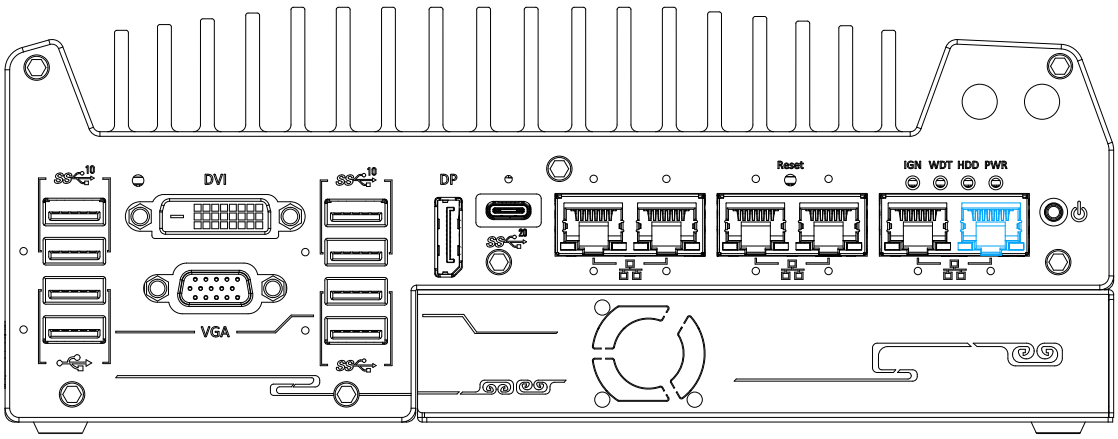

NOTE

Please make sure the Intel® chipset and Ethernet driver has been properly installed prior to setting up WOL function.

To enable WOL function, please set up WOL settings in the BIOS and in the operating system by follow the steps described below.

1. When the system boots up, press F2 to enter BIOS setup utility.
2. Go to the **[Power]**>**[Wake On LAN]** and set it to **[Enabled]**.
3. Press F10 to "**Save changes and exit BIOS**" and allow the system boot into the operating system.
4. Once booted into the Windows system, press "**Windows key + E**", right-click on "**Network**>**Properties**>**Change adapter settings**". Locate and double-click on the adapter Intel® I219 Gigabit Network Connection, click on **Configure...**

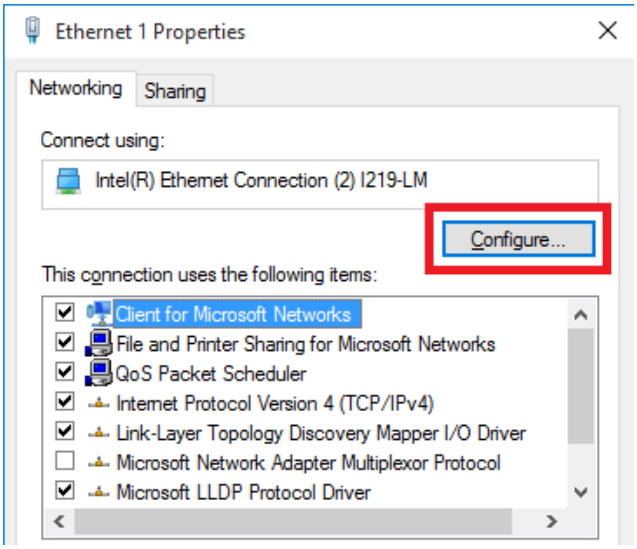

5. Click on the **Power Management** tab and check the following options. Click on OK when done.

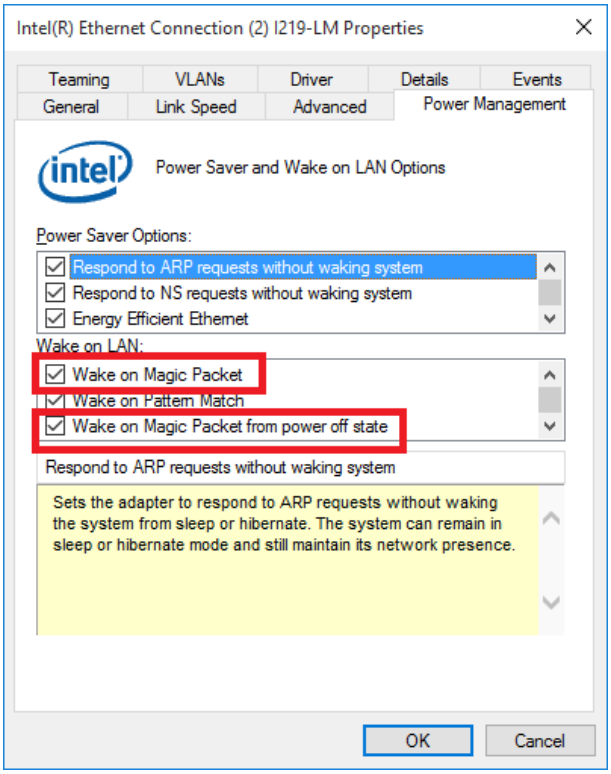

Magic Packet

The magic packet is a broadcast frame containing anywhere within its payload 6 bytes of all 255 (FF FFFFFFFFFF in hexadecimal), followed by sixteen repetitions of the target computer's 48-bit MAC address.

For example, NIC's 48-bit MAC Address is 78h D0h 04h 0Ah 0Bh 0Ch

DESTINATION SOURCE MISC

FF FFFFFFFFFF

78 D0 04 0A 0B 0C 78 D0 04 0A 0B 0C

78 D0 04 0A 0B 0C 78 D0 04 0A 0B 0C

78 D0 04 0A 0B 0C 78 D0 04 0A 0B 0C

78 D0 04 0A 0B 0C 78 D0 04 0A 0B 0C

78 D0 04 0A 0B 0C 78 D0 04 0A 0B 0C

78 D0 04 0A 0B 0C 78 D0 04 0A 0B 0C

78 D0 04 0A 0B 0C 78 D0 04 0A 0B 0C

78 D0 04 0A 0B 0C 78 D0 04 0A 0B 0C

MISC CRC

There are some free tools available on Internet that can be used to send a magic packet. Please refer to the following link to understand more about Magic Packet.

4 System Configuration

4.1 BIOS Settings

The system is shipped with factory-default BIOS settings meticulously programmed for optimum performance and compatibility. In this section, we'll illustrate some of BIOS settings you may need to modify. Please always make sure you understand the effect of change before you proceed with any modification. If you are unsure of the function you are changing, it is recommended to change one setting at a time to see its effect(s).

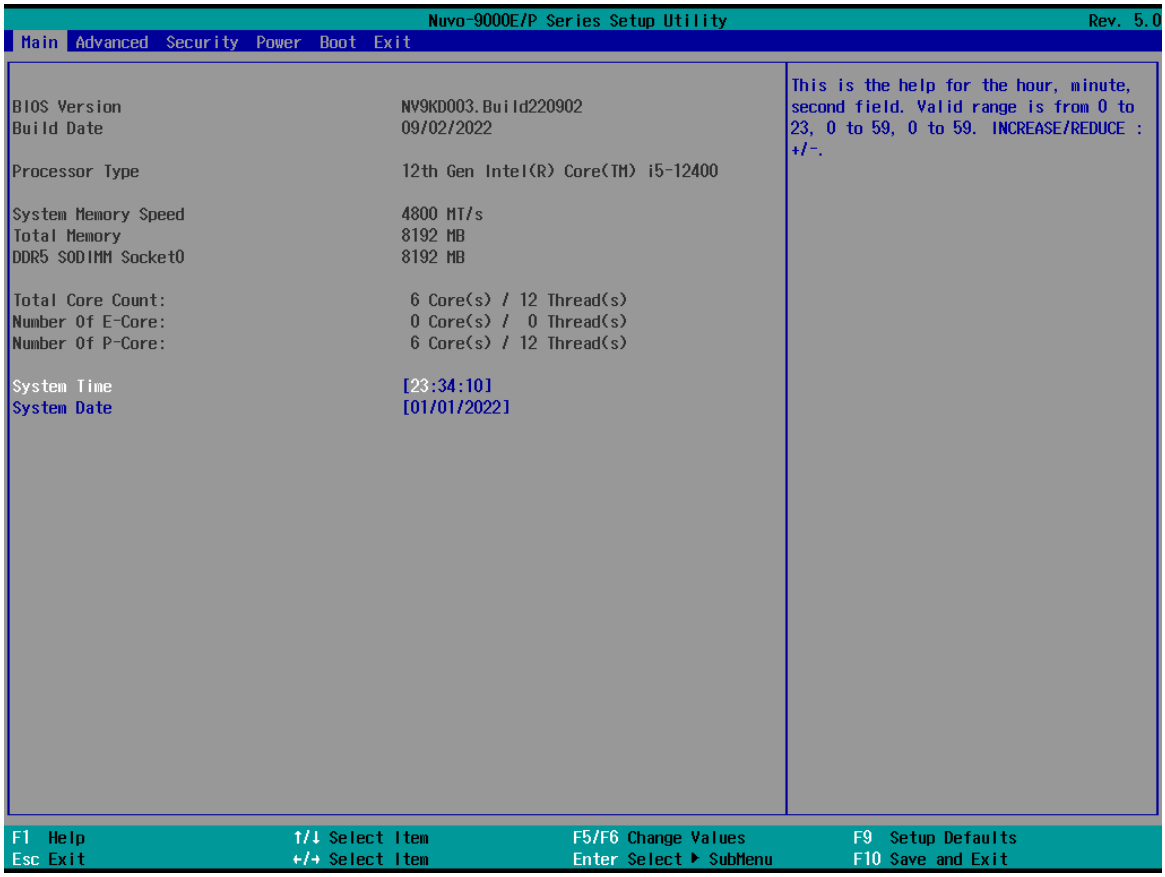

NOTE

Not all BIOS settings will be discussed in this section. If a particular setting/ function you are after requires specific BIOS settings but is not discussed in this section, please contact Neousys Technical Support staff.

4.1.1 COM Port Configuration

The system's COM1/ COM2 ports support RS-232 (full-duplex), RS-422 (full-duplex) and RS-485 (half-duplex) mode. You can set the COM1 operating mode via BIOS settings. Another option in BIOS called "*Slew Rate*" defines how sharp the rising/falling edge is for the output signal of COM1. For long-distance RS-422/485 transmission, you may set the "*Slew Rate*" option as "High" to improve signal quality. For RS-422/485 communication, the "*RS-422/485 Termination*" option determines whether to enable/disable internal termination of RS-422/485 transceiver according to your wiring configuration (e.g. with or without external termination).

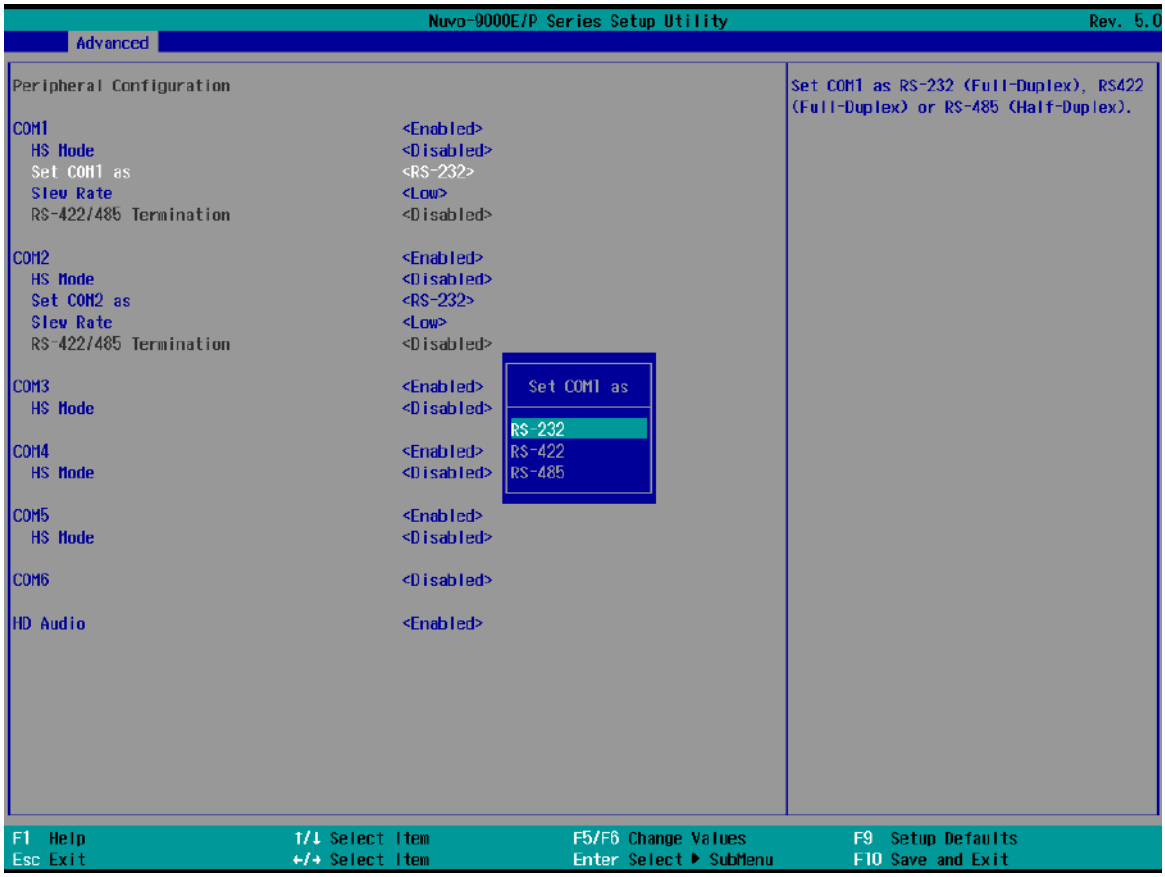

To set COM port operating mode:

1. Press **F2** when the system boots up to enter the BIOS setup utility.
2. Go to **[Advanced] > [Peripheral Configuration]**.
3. Set the **[Set COM1 Mode as]** option to the desired mode.
4. Once set, press **F10** to "Exit Saving Changes".

4.1.2 COM Port High Speed Mode

The high speed mode of each COM port effectively allows for the port's baud rate generator to operate at 8x the speed with an effective baud rate of 921,600 bps (115,200 x 8). Please refer to the following instructions on how to enable the high speed mode for your COM port (COM1 used as an example).

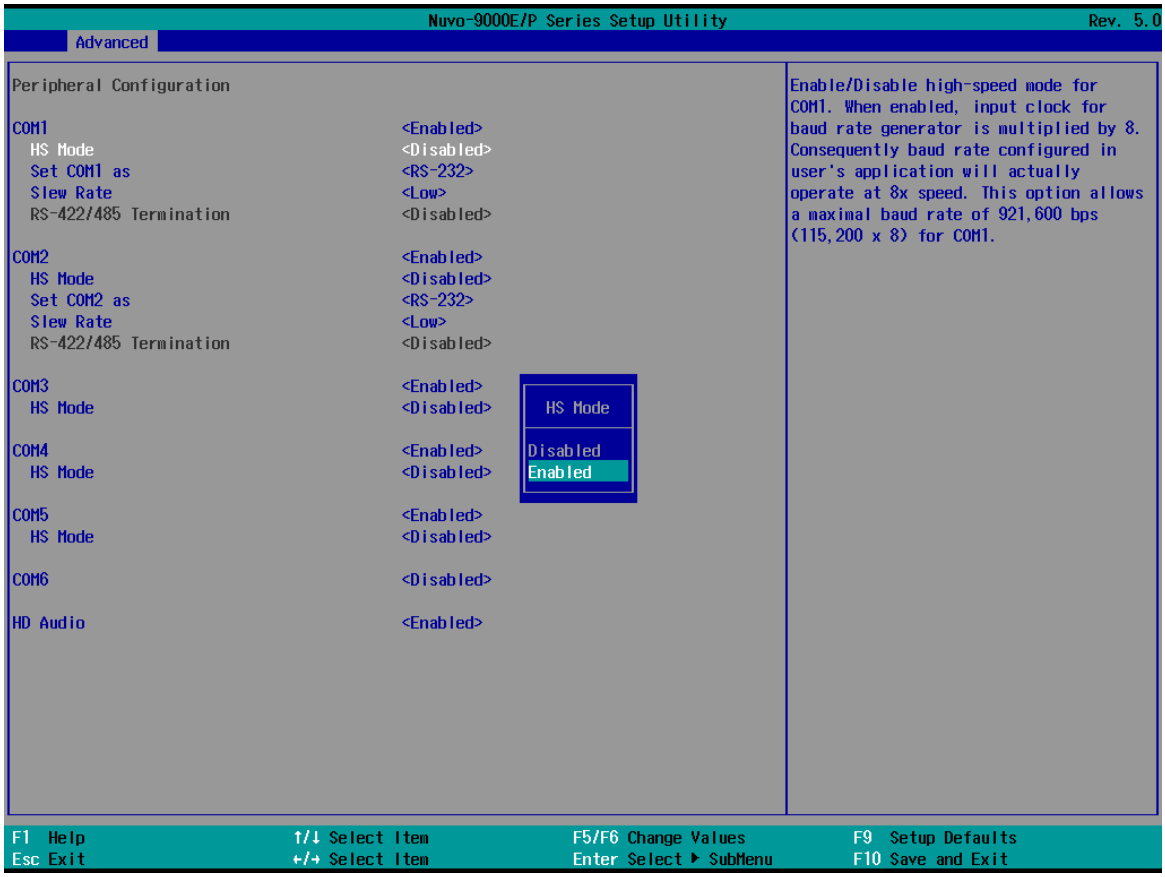

To set COM port high speed mode:

1. Press **F2** when the system boots up to enter the BIOS setup utility.
2. Go to **[Advanced] > [Peripheral Configuration]**.
3. Enable or set the **[Set COM1 Mode as]** option to the desired mode.
4. Highlight **[HS Mode]** and press ENTER to bring up options, highlight **[Enable]** and press ENTER.
5. Once set, press **F10** to “Exit Saving Changes”.

4.1.3 Delay for PEG Initialization

This setting offers delay in milliseconds for PEG port initialization and PCI enumeration. By increasing the delay value, it may eliminate compatibility issue(s) with some PCIe add-on cards.

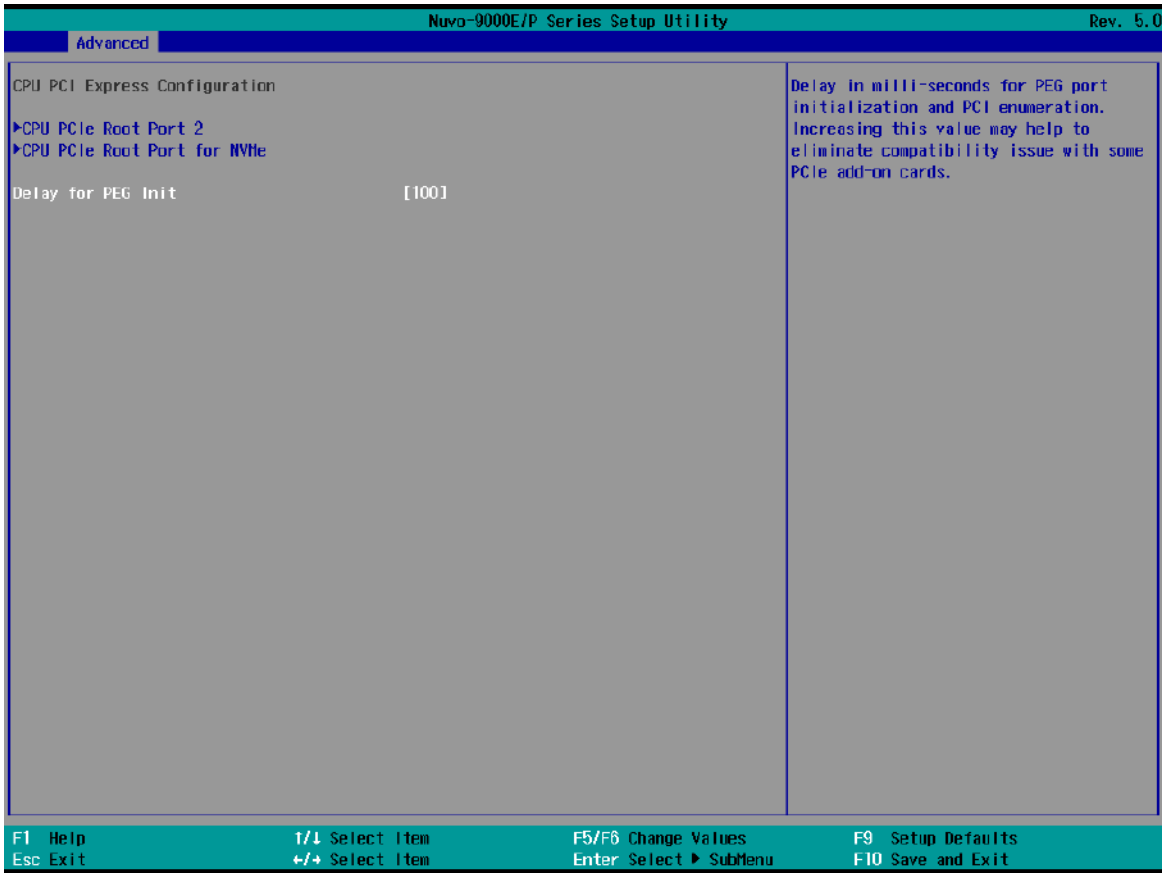

To set PEG delay in milliseconds:

1. When system boots up, press F2 to enter BIOS setup utility.
2. Go to **[Advanced]** > **[System Agent (SA) Configuration]** > **[CPU PCI Express Configuration]** > **[Delay for PEG Init]** and press ENTER.
3. A small window appears and you may enter a maximum delay value of up to 30,000ms.
4. When done, press F10 to “Exit Saving Changes”

4.1.4 Volume Management Device (VMD)

To set up a RAID 0 or 1 volume, you need to have at least two hard drives or SSDs installed. The system supports RAID configurations in RAID 0 (striping) or RAID 1 (mirror) mode. Users can select the configuration that best suit their needs with RAID 0 (striping) mode offering better hard drive read/ write performances while RAID 1 (mirror) offers better data security.

WARNING

Please back up the hard drive data before you create or modify RAID volume(s) as the process may cause irreversible data deletion. When creating a RAID volume, it is also recommended to use hard drives from the same batch (same brand, model, capacity, rpm rate, etc.) to avoid performance or capacity allocation issues.

1. When system boots up, press F2 to enter BIOS setup utility.

2. Go to **[Advanced] > [VMD setup menu]**, press ENTER.

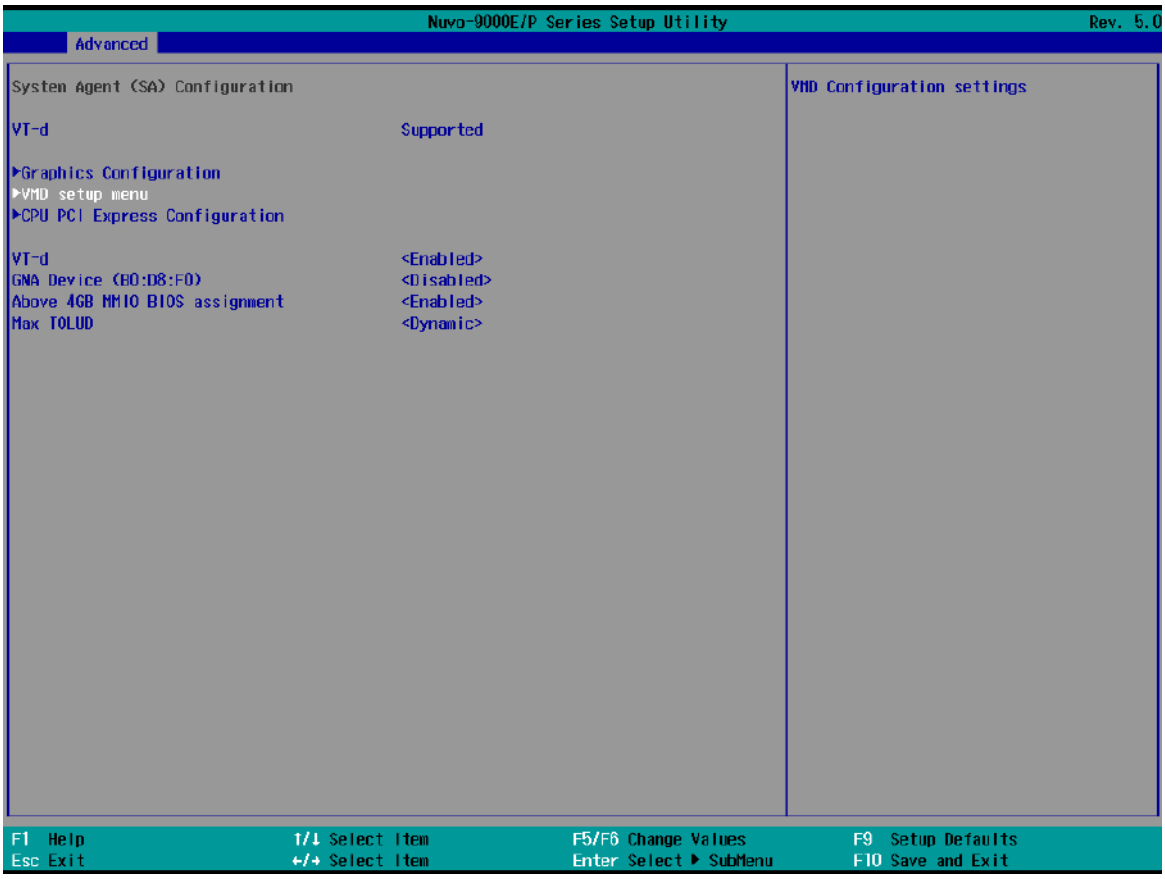

3. Highlight **[Enable VMD controller]**, press ENTER to bring up Options, Enabled/ Disabled, select Enabled and press ENTER.

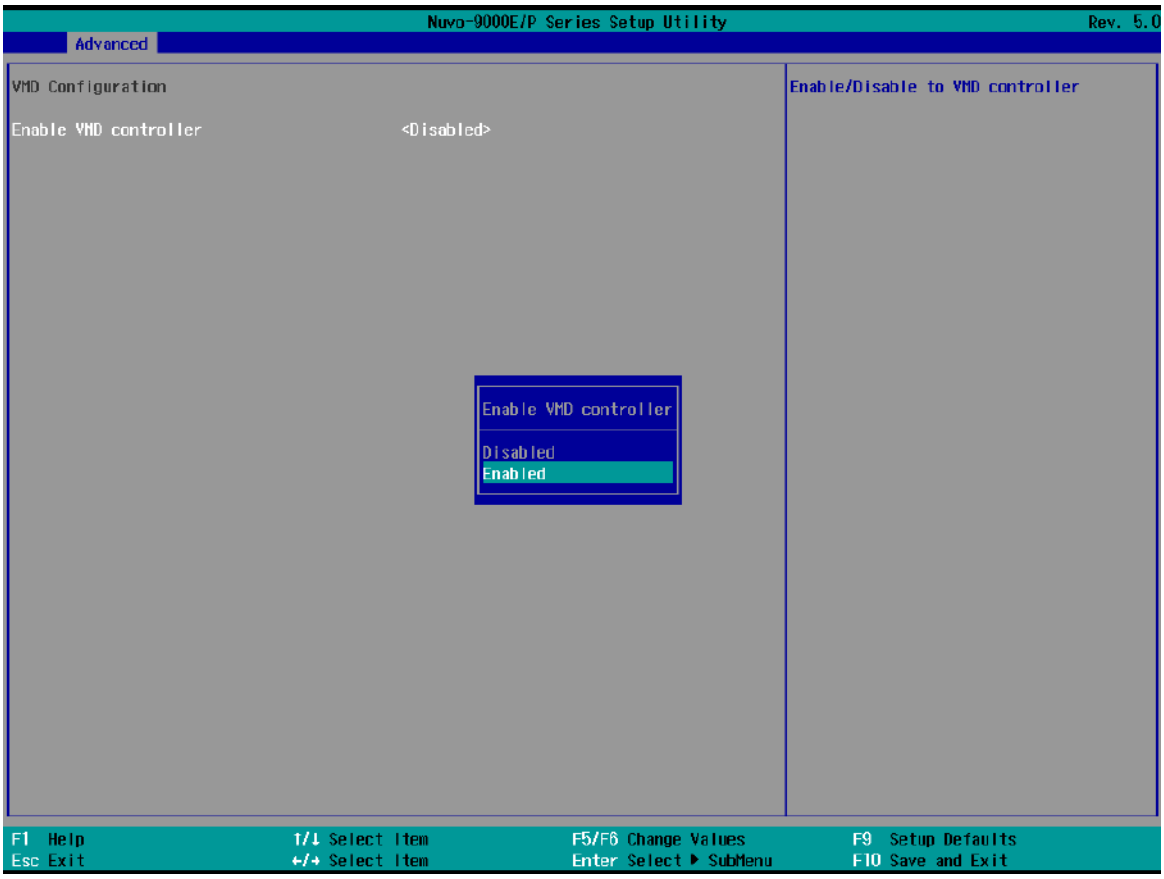

4. Highlight **[RAID0]** or **[RAID1]**, press ENTER to bring up options, Enabled/ Disabled, select your choice and press ENTER again to confirm selection.

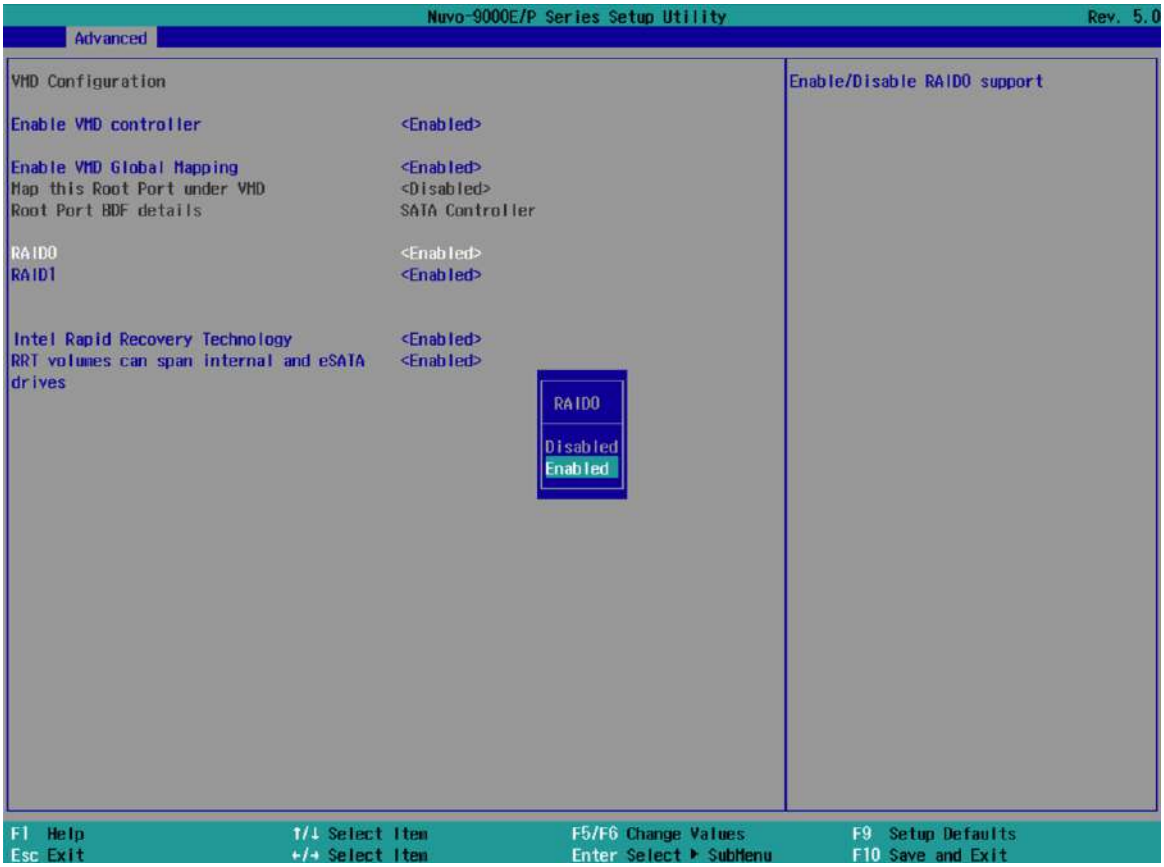

5. Highlight your selection, press Enter and press F10 to “Exit Saving Changes”.

4.1.5 TPM Availability

Trusted Platform Module (TPM) is a hardware-based cryptoprocessor to secure hardware by integrating cryptographic keys into devices. The system is designed with on-board TPM 2.0 module. As TPM 2.0 requires 64-bit Windows 10 with UEFI boot mode, it is enabled in BIOS by default.

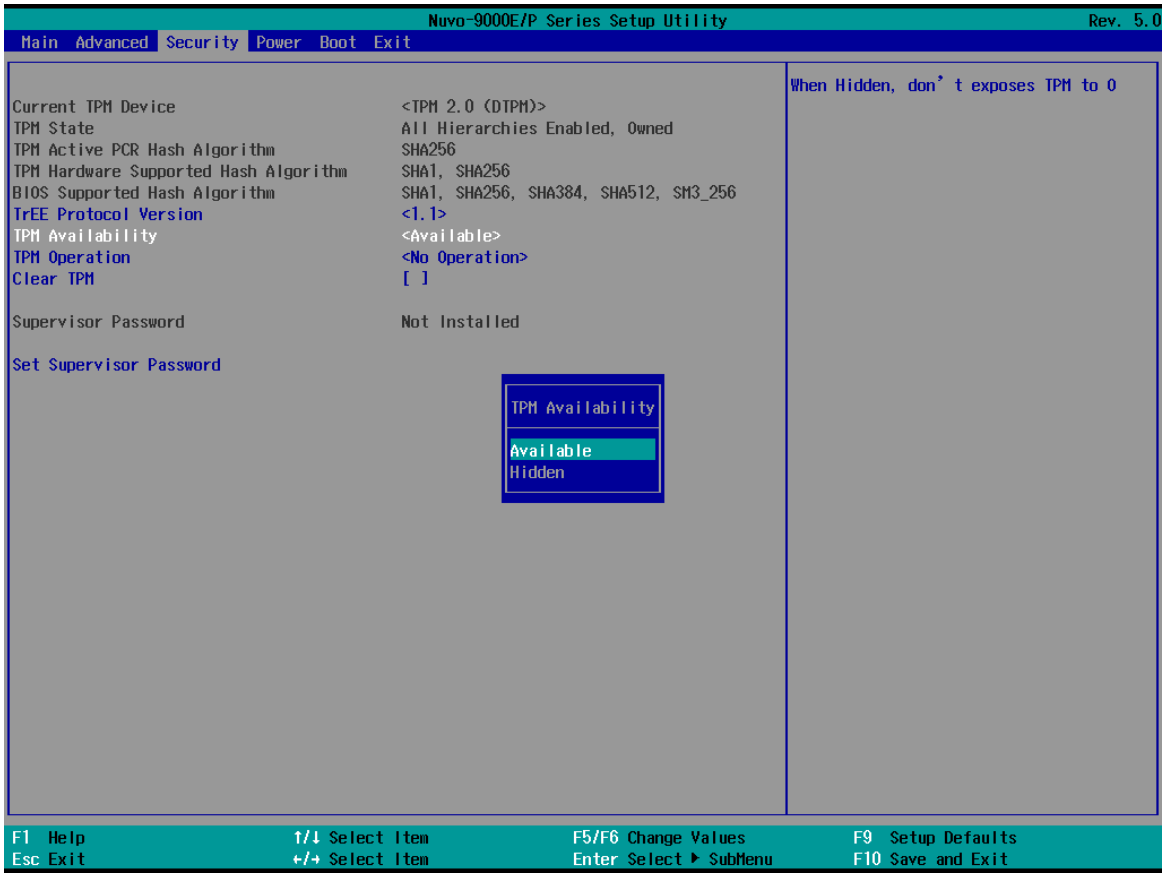

To enable TMP availability:

1. When system boots up, press F2 to enter BIOS setup utility.
2. Go to **[Security] > [TPM Availability]**, press ENTER to bring up Options, Available/ Hidden.
3. Highlight your selection, press Enter and press F10 to “Exit Saving Changes”.

4.1.6 Secure Boot

The setting restores the Secure Boot configuration to its default factory settings, including the original platform keys, key-exchange keys, and allowed/forbidden signature databases. This can be used to recover the system's standard Secure Boot configuration after custom keys or settings have been applied.

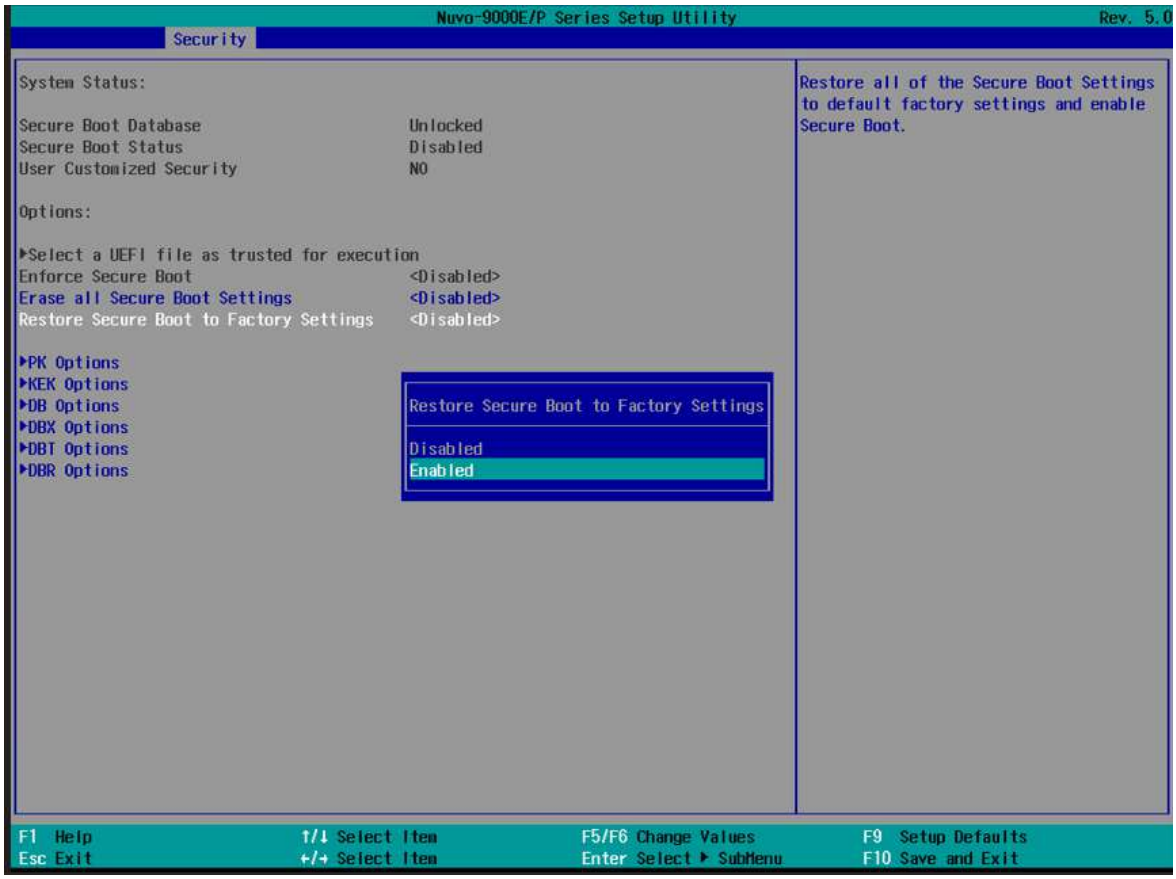

To enable/ disable "PoE Power Enable" option:

1. When system boots up, press F2 to enter BIOS setup utility.
2. Go to **[Security] > [Administer Security Boot] > [Restore Secure Boot to Factory Settings]**..
3. Press ENTER to bring up setting options, scroll to the setting (Enabled/ Disabled) you desire and press ENTER to set.

4.1.7 Power over Ethernet (PoE) Power Enable

Power over Ethernet (PoE) supplies electrical power and data on a standard CAT-5/CAT-6 Ethernet cable. Acting as a PoE PSE (Power Sourcing Equipment), compliant with IEEE 802.3at, each PoE port delivers up to 25W to a Powered Device (PD). The system has a total 100W power budget. The PoE power can be Enabled/ Disabled in the BIOS.

To enable/ disable “PoE Power Enable” option:

1. When system boots up, press F2 to enter BIOS setup utility.
2. Go to **[Power] > [PoE Power Enable]**.
3. Press ENTER to bring up setting options, scroll to the setting (Enabled/ Disabled) you desire and press ENTER to set.

4. You can also enable/ disable each port, individually. Simply use the arrow key to highlight the port, press ENTER to bring up options (Enabled/ Disabled), press ENTER again to select the option.

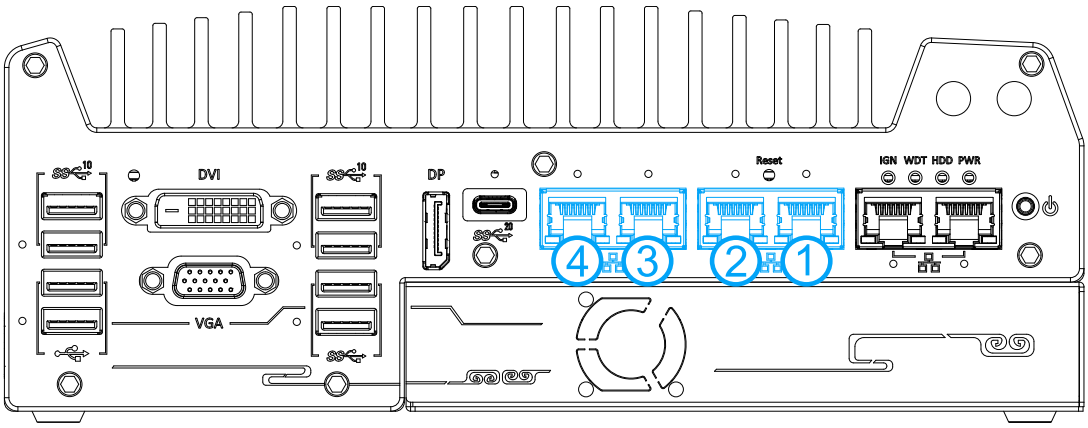

Nuvo-9000 series LAN ports

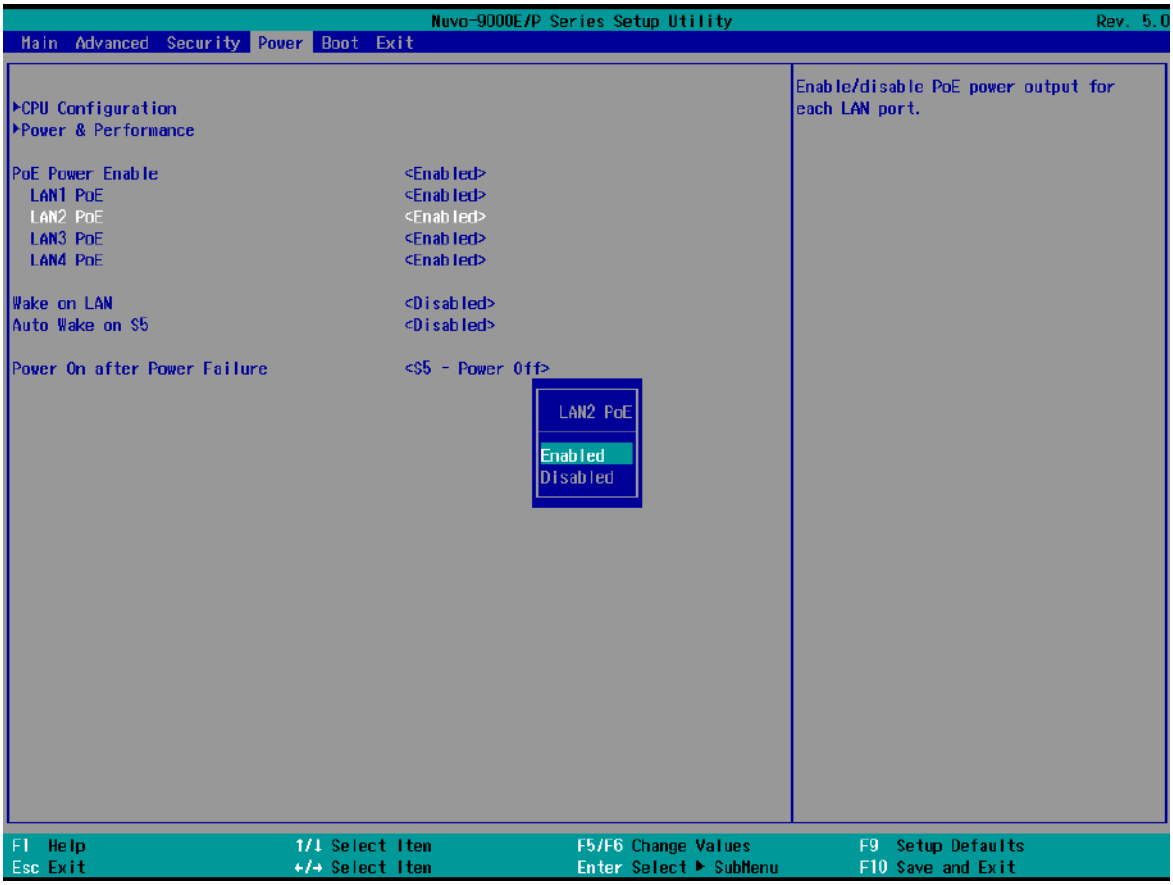

5. Press F10 to “Exit Saving Changes”.

4.1.8 Auto Wake on S5

When the system is set to operate in S5 state, the user can specify a time to turn on the system, daily or monthly.

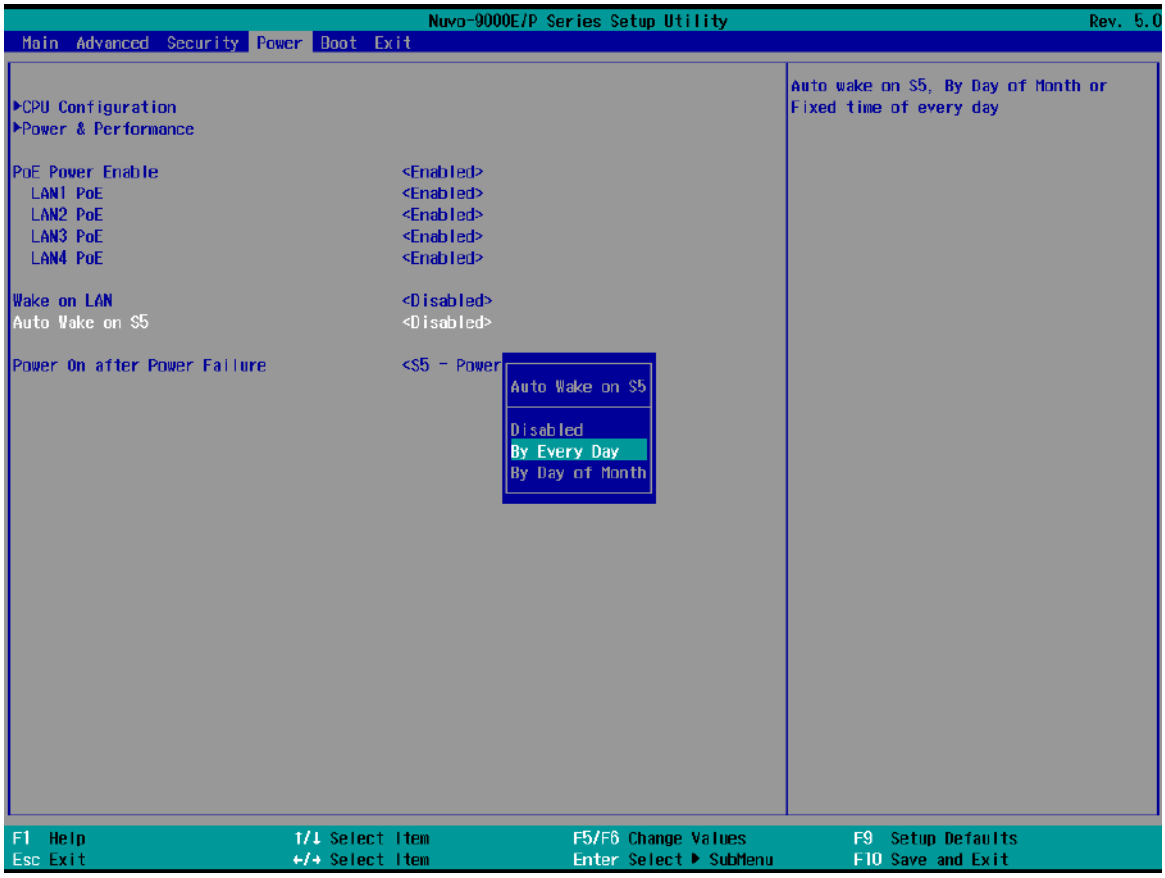

Value	Option	Description
Auto Wake on S5	Disabled	The system does not turn on when operating in state S5.
	By Every Day	The system turns on each day when operating in state S5. Specify the time of day.
	By Day of Month	The system turns on each month when operating in state S5. Specify the day and time.

Highlight your selection, press ENTER and press F10 to “Exit Saving Changes”.

4.1.9 Power On After Power Failure Option

This option defines the behavior of System series when DC power is supplied.

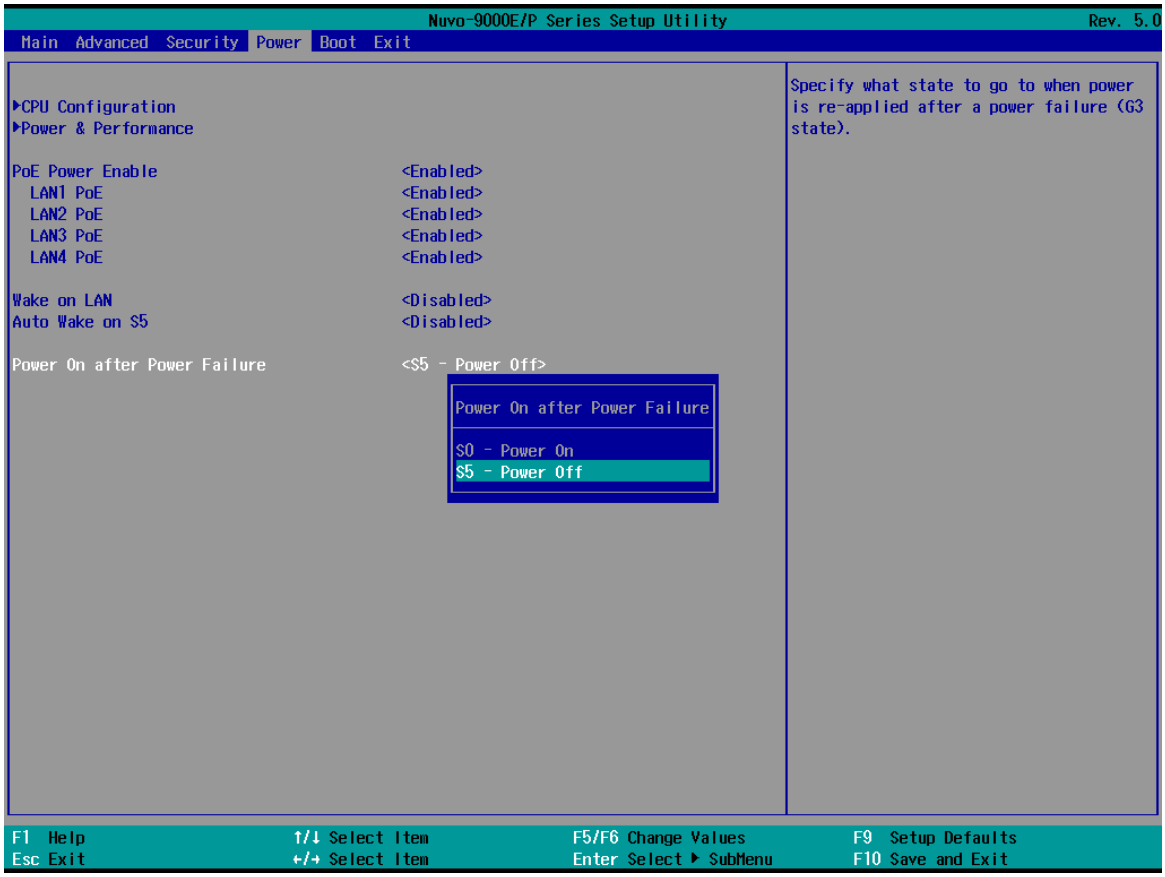

Value	Description
S0 – Power On	System is powered on when DC power is supplied.
S5 – Power Off	System is kept in off state when DC power is supplied.

To set “Power On after Power Failure” option:

1. When system boots up, press F2 to enter BIOS setup utility.
2. Go to **[Power] > [Power On after Power Failure]**.
3. Scroll down to highlight **[Power On after Power Failure]**, press ENTER to bring up setting options, S0 – Power On or S5 – Power Off, and press ENTER to select the setting.
4. Press F10 to “Exit Saving Changes”.

4.1.10 Power & Performance (CPU SKU Power Configuration)

The system supports Intel 14th/ 13th/ 12th Gen LGA 1700 CPUs from 35W to 65W TDP. A unique feature, "**SKU Power Config**" is implemented in BIOS to allow users to specific user-defined SKU power limit. Although the system is designed to have best thermal performance with CPUs of 35W TDP, you can install a 65W CPU and limit its SKU power (to 35W) to obtain more computing power. This feature gives you the flexibility of CPU selection and great balance between computing power and operating temperature range.

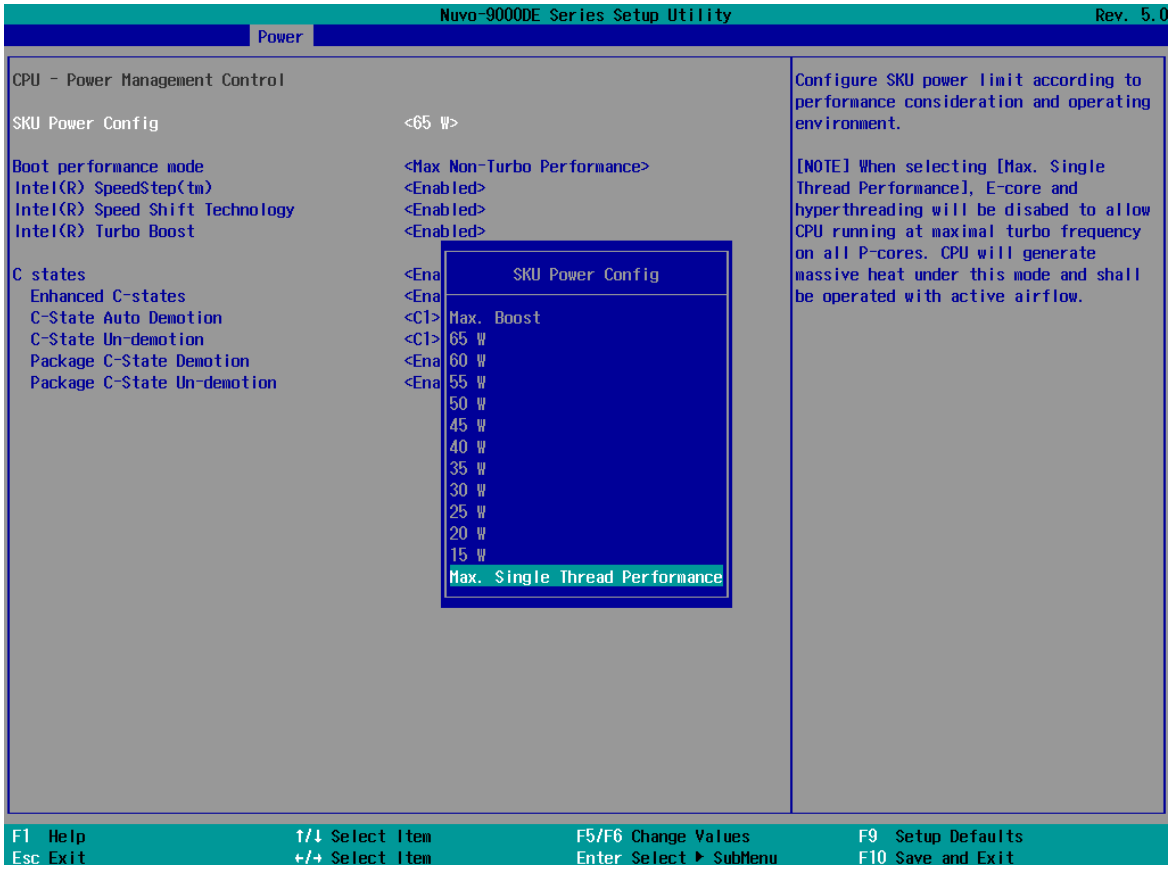

To configure the CPU SKU power limit:

1. When the system boots up, press F2 to enter BIOS setup utility.
2. Go to **[Power]** → **[Power & Performance]**.
3. Select a proper value of SKU power limit for **[SKU Power Config]** option.
4. Press F10 to "Exit Saving Changes.

NOTE

The option "Max. Boost" unleashes the CPU's maximum performance with the highest power consumption. Make sure you're using a power supply with a rated power output four times that of the CPU TDP to ensure reliable system operations.

For users not utilizing multi-thread performance, you may select "Max. Single Thread Performance" option to enable maximum single core performance.

4.1.11 Active Performance/Efficient Cores

NOTE

The default "Active Performance/ Efficient Cores" is recommended. Both the Performance/ Efficient cores are all enabled by default (if efficient cores are available).

The Intel 14th/ 13th/ 12th Gen CPU may come in a hybrid configuration of "Performance" and "Efficient" cores depending on the CPU model. CPUs that have Efficient-cores are i5-12600K/ KF have 4 Efficient-cores, all i7 CPUs have 4-Efficient cores while all i9 CPUs have 8 Efficient-cores. In the CPU Configuration setting, the BIOS allows the user to disable/ enable Performance/ Efficient cores.

By disabling the Efficient-cores, you may see an increase in operating frequencies in the Performance cores. The overall multi-core performance may degrade but if your application utilizes no more than four cores, it may benefit the overall performance.

By disabling the Performance cores, the system may consume less power and generate less heat at the cost of performance loss. Both the Performance/ Efficient cores are all enabled by default (if efficient cores are available).

The following screenshot is a demonstration of i7-12700 with 8 performance cores and 4 efficient cores.

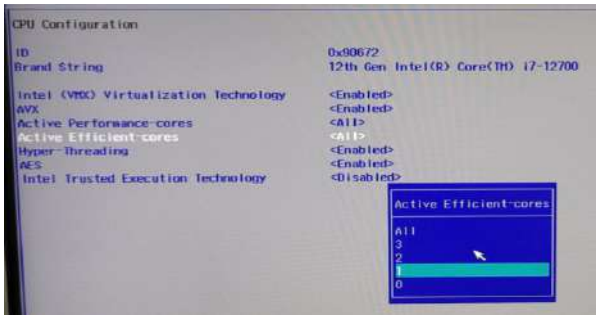	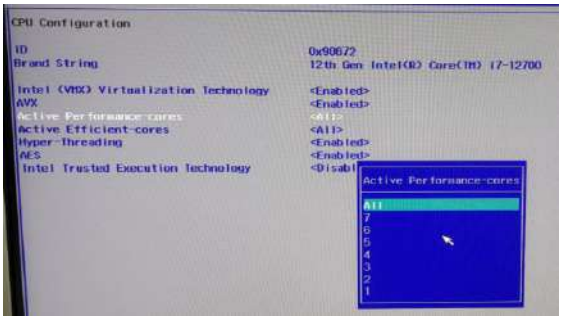
Efficient-cores	**Performance-cores**

To enable/ disable Performance/ Efficient cores:

1. When system boots up, press F2 to enter BIOS setup utility.
2. Go to **[Power] > [CPU Configuration]**.
3. Highlight Active Performance-cores or Active Efficient-cores and press ENTER, scroll to enable all or a selected number of cores to activate, press ENTER to set.
4. Press F10 to "Exit Saving Changes".

4.1.12 Wake on LAN Option

Wake-on-LAN (WOL) is a mechanism which allows you to turn on your System series via the Ethernet connection. To utilize Wake-on-LAN function, you need to enable this option first in BIOS settings. Please refer "Powering On Using Wake-on-LAN" to set up the system.

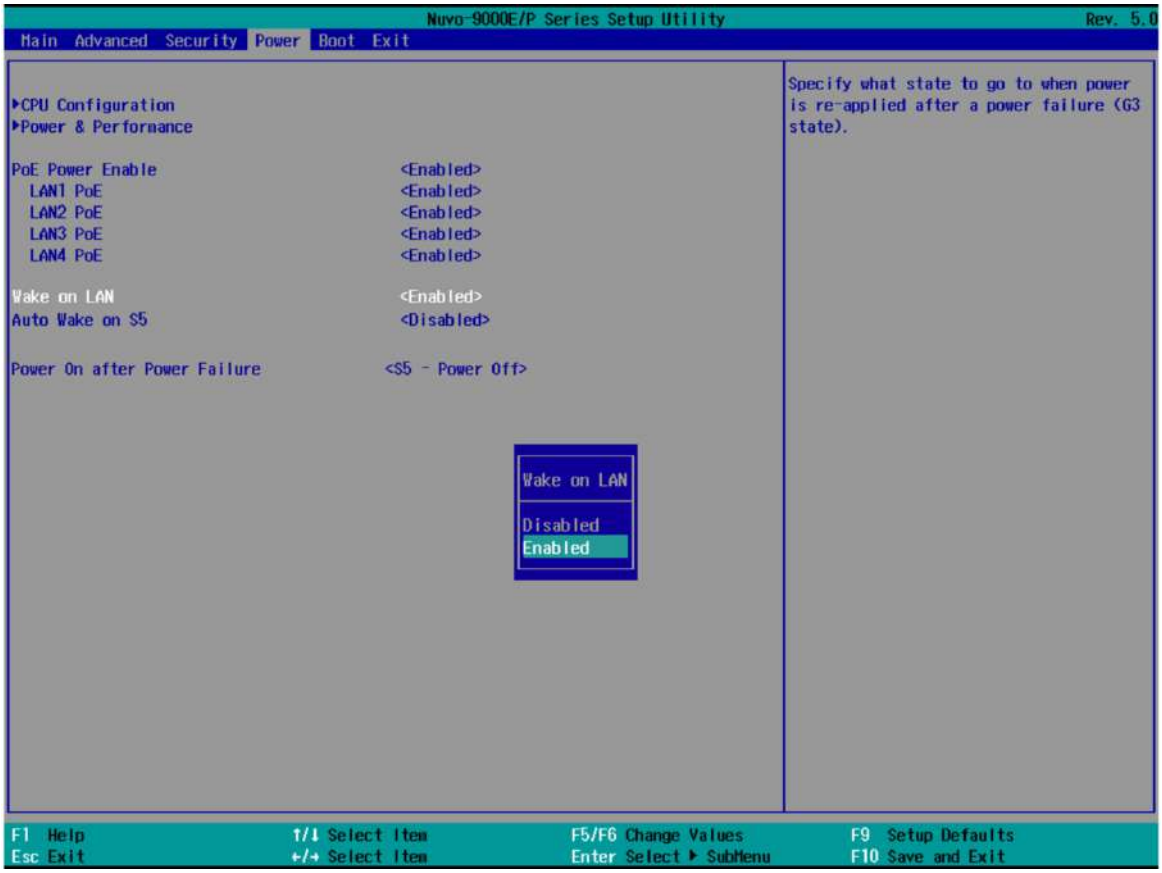

To enable/ disable "Wake on LAN" option:

1. When system boots up, press F2 to enter BIOS setup utility.
2. Go to **[Power] > [Wake on LAN]**.
3. Press ENTER to bring up setting options, scroll to the setting you desire and press Enter to set.
4. Press F10 to "Exit Saving Changes".

4.1.13 Boot Menu

The Boot menu in BIOS allows you to specify the system's boot characteristics by setting bootable device components (boot media) and method. Or, you may press F12 upon system start up and select a device you wish boot from.

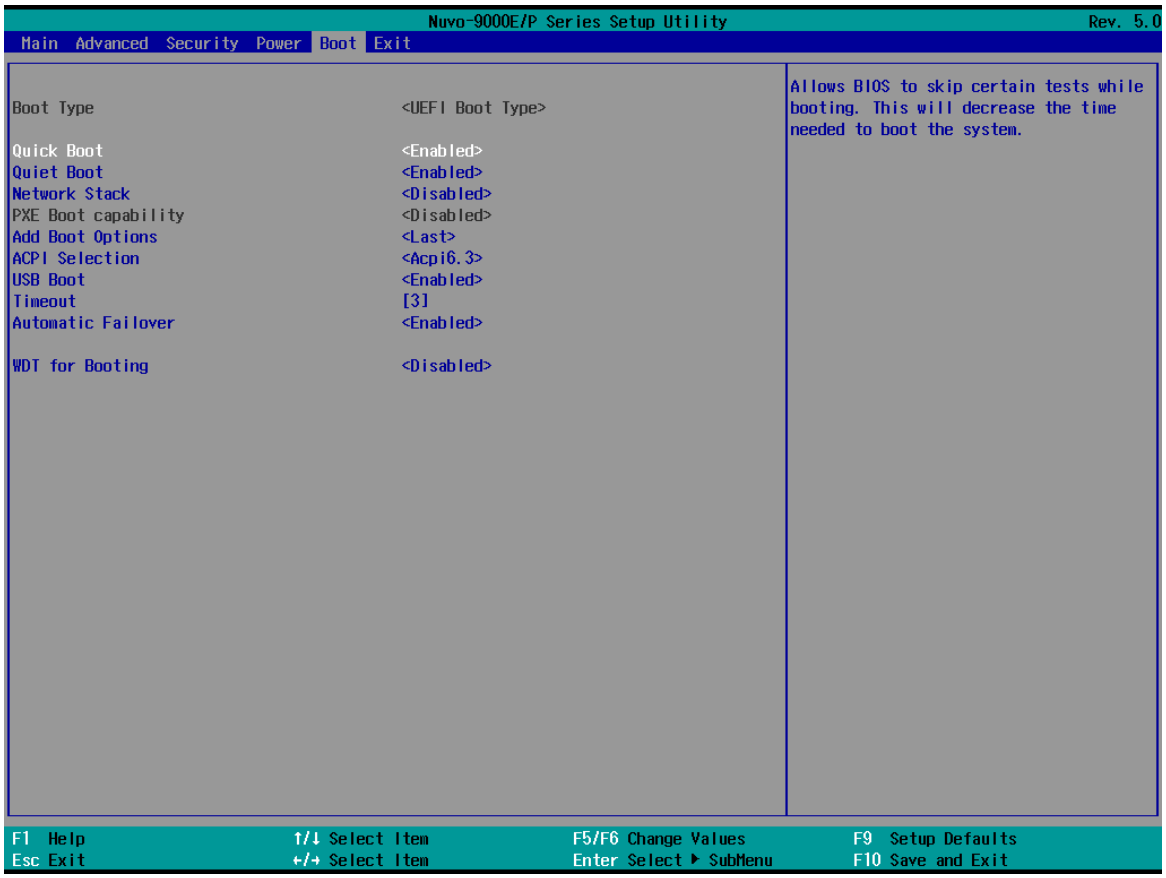

Value	Option	Description
Boot Type	UEFI Boot Type	Only UEFI boot media listed are approved as boot media.
Quick Boot	Enabled	The system starts up faster because BIOS skips various hardware function tests
	Disabled	The system starts up slower because BIOS goes through various hardware functions tests
Network Stack	Enabled	The system is available for network access using UEFI.
	Disabled	The system is not available for network access using UEFI.
PXE Boot capability	Disabled	Only UEFI Network Stack is supported: Preboot eXecution Environment (PXE) is not supported
	Enabled	By enabling the PXE boot, one can choose to

		boot via **I219 Only**/ **I226**/ **I226-IT Only** or **All NICs**.
Add Boot Options	First	Newly detected boot media are placed at the top of the boot order.
	Last	Newly detected boot media are placed at the bottom of the boot order.
ACPI Selection	1.0B/ 3.0/ 4.0/ 5.0/ 6.0	Advanced Configuration and Power Interface allow the operating system to control system power management
USB Boot	Enabled	Allow boot from bootable USB devices.
	Disabled	Does not allow boot from bootable USB devices
Timeout	1, 2, 3, etc (in seconds)	Boot delay time in seconds to give the user time to activate the hotkey to access the BIOS
Automatic Failover	Enabled	Automatically checks for the next bootable device when the set default device fails.
	Disabled	Will only boot from the designated device.
WDT for booting	Disabled, 1, 3, 5, 10 (minutes)	WDT ensures a successful system boot by specifying a timeout value

4.1.14 Add Boot Options (Position New Boot Device)

The “Add Boot Options” allow you to determine whether a newly added device (eg. USB flash disk) is to boot as the first device to boot or the last in the boot sequence.

To set the newly-installed boot device as the first or last boot device:

1. Press **F2** when the system boots up to enter the BIOS setup utility.
2. Go to **[Boot] > [Add Boot Options]** menu.
3. Select **[First]** or **[Last]** for your newly-added boot device and press ENTER.

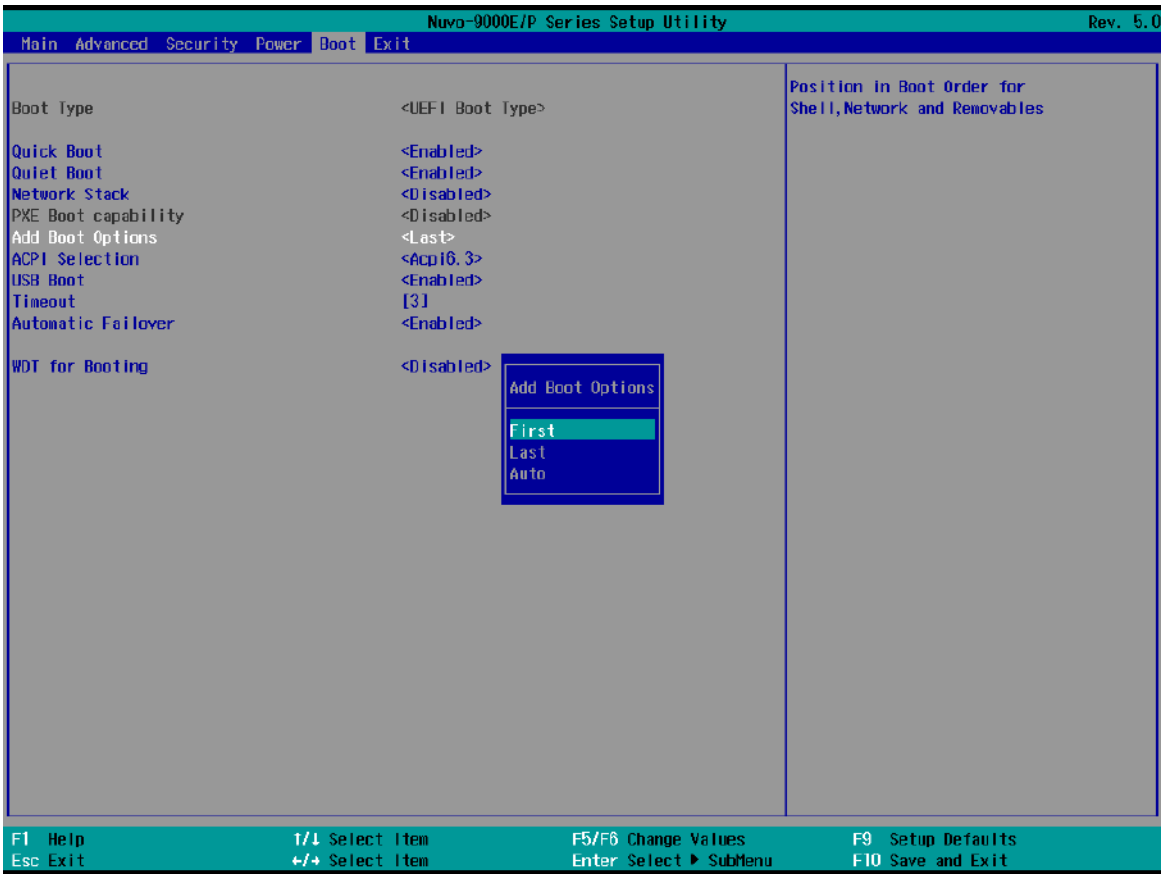

4. Once set, press **F10** to “Exit Saving Changes”.

4.1.15 Watchdog Timer for Booting

The watchdog timer secures the boot process by means of a timer. Once the timer expires, a reset command is issued to initiate another booting process. There are two options in BIOS menu, "*Automatically after POST*" and "*Manually after Entering OS*". When "*Automatically after POST*" is selected, the BIOS automatically stops the watchdog timer after POST (Power-On Self Test) OK. When "*Manually after Entering OS*" is selected, the user must stop the watchdog timer once booted into the OS. This guarantees the system can always boot into the OS, otherwise another booting process will be initiated. For information about programming watchdog timer, please refer to Watchdog Timer & Isolated DIO.

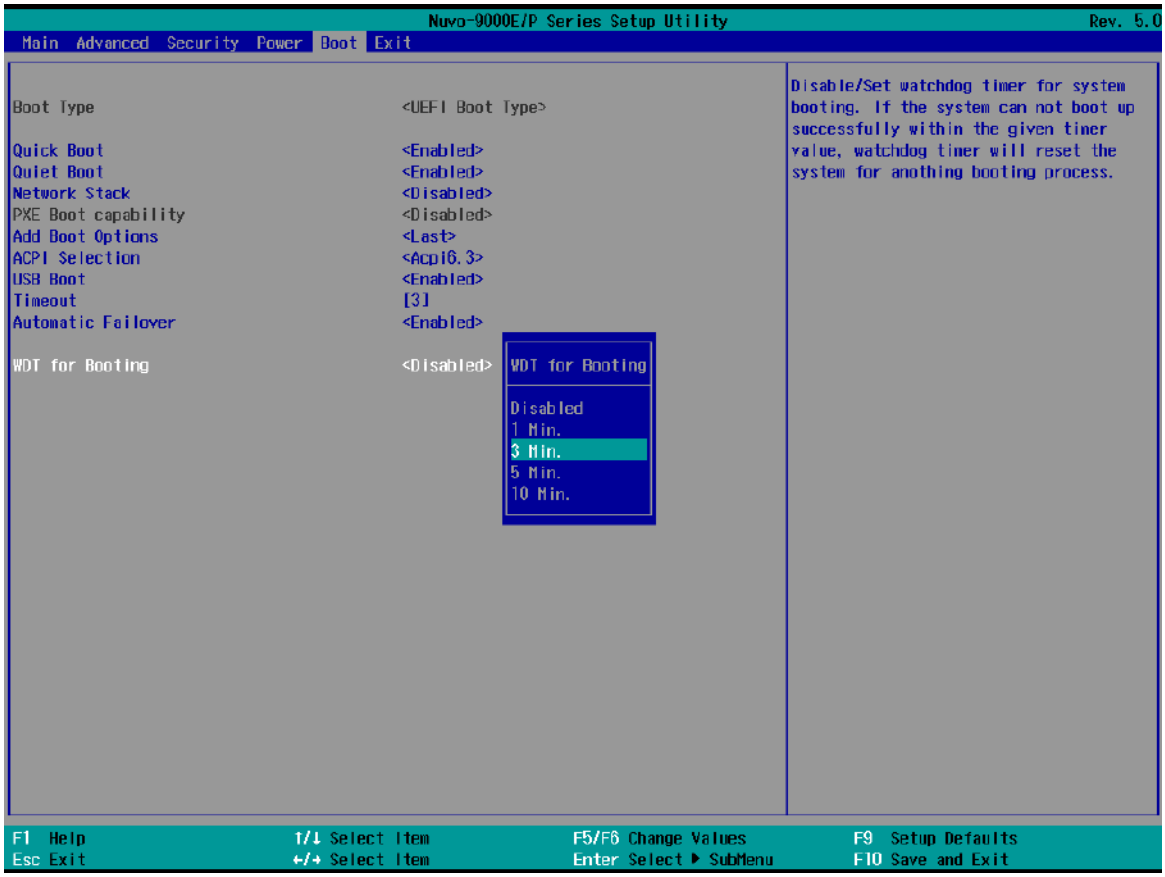

To set the watchdog timer for boot in BIOS:

1. When system boots up, press F2 to enter BIOS setup utility.
2. Go to **[Boot]** menu.
3. Disable or select timeout value for **[WDT for Booting]** option.
4. Once you give a timeout value, the **[WDT Stop Option]** option appears. You can select *"Automatically after POST"* or *"Manually after Entering OS"*.
5. Press F10 to "Exit Saving Changes".

4.2 AMT Configuration

Intel® AMT (Active Management Technology) is a hardware-based technology for remotely managing target PCs via Ethernet connection. The system supports AMT function via its Ethernet port implemented with Intel I219-LM. Prior to using the AMT function to remotely control the system, you need to configure AMT password and network settings.

1. Connect Ethernet cable toI219-LM Ethernet port (indicated in **blue**).

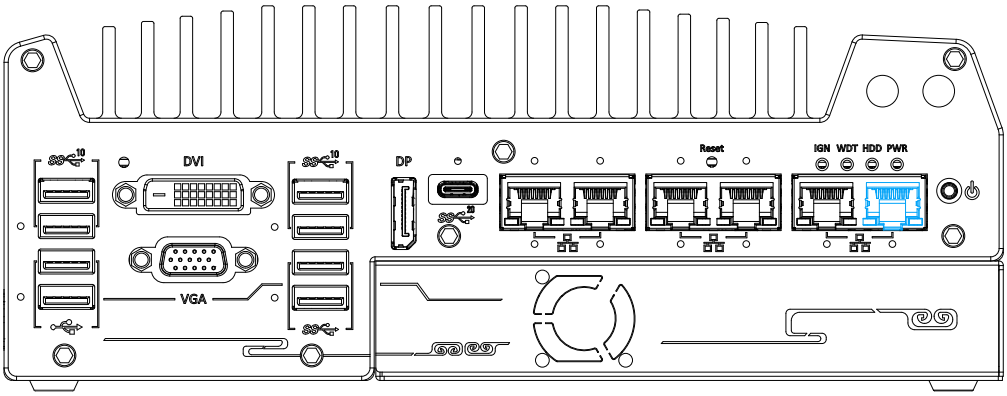

2. When the system boots up, press F10 to enter the “Front Page” menu, use the arrow key to highlight MEBx and press ENTER.

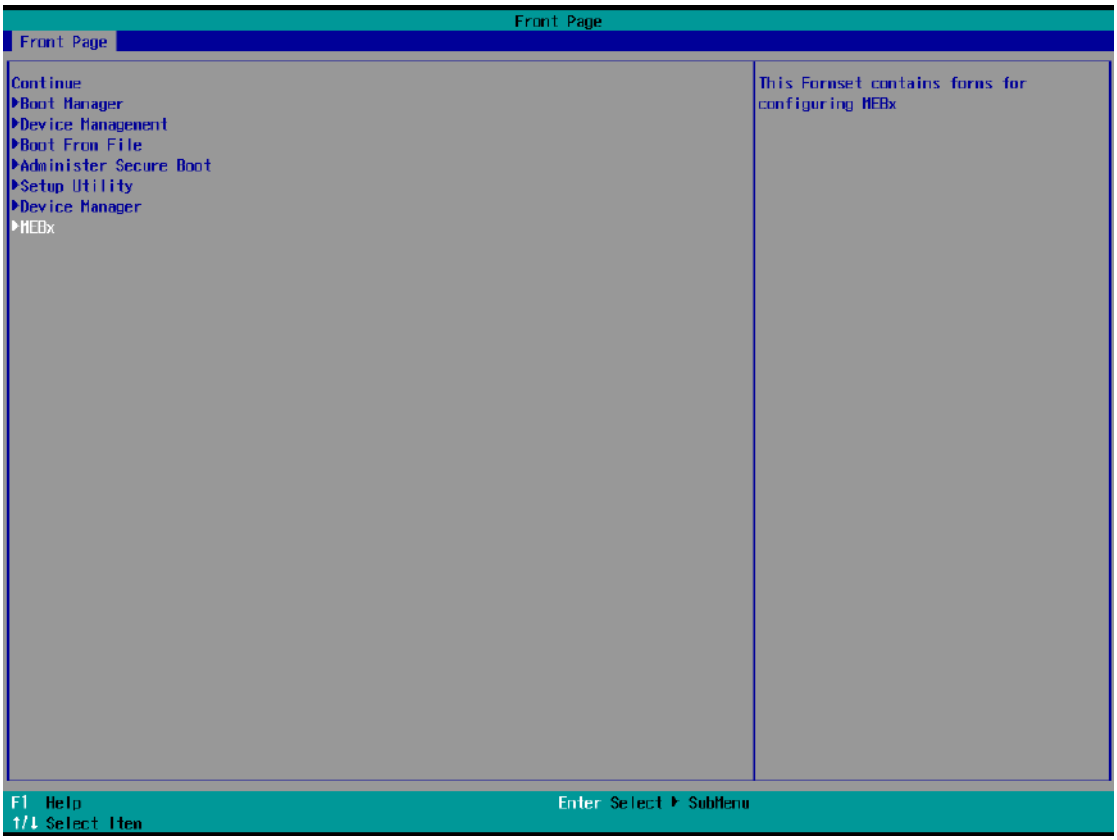

3. When entering MEBx for the first time, it will ask for the default (old) password. Please type “admin” and press ENTER.

4. The system will then request that you enter a new password. The new password must consist of at least one 7-bit ASCII non alpha-numeric character, above 32 (eg,!, @, $) and 8 to 32 characters long. Note that the under-score sign “_” is considered an alpha-numeric character.

5. After typing your new password, it will bring you to the MEBx settings page. For more MEBx configuration details, please refer to Intel® MEBX User Guide.

4.3 RAID Configuration

To set up a RAID 0 or 1 volume, you need to have at least two hard drives or SSDs installed. The system supports RAID configurations in RAID 0 (striping) or RAID 1 (mirror) mode. Users can select the configuration that best suit their needs with RAID 0 (striping) mode offering better hard drive read/ write performances while RAID 1 (mirror) offers better data security.

WARNING

Please back up the hard drive data before you create or modify RAID volume(s) as the process may cause irreversible data deletion. When creating a RAID volume, it is also recommended to use hard drives from the same batch (same brand, model, capacity, rpm rate, etc.) to avoid performance or capacity allocation issues.

4.3.1 Enabling Volume Management Device (VMD) for RAID Volume Setup

1. When system boots up, press F2 to enter BIOS setup utility.
2. Go to **[Advanced] > [System Agent (SA) Configuration] > [VMD setup menu]**, and press ENTER.

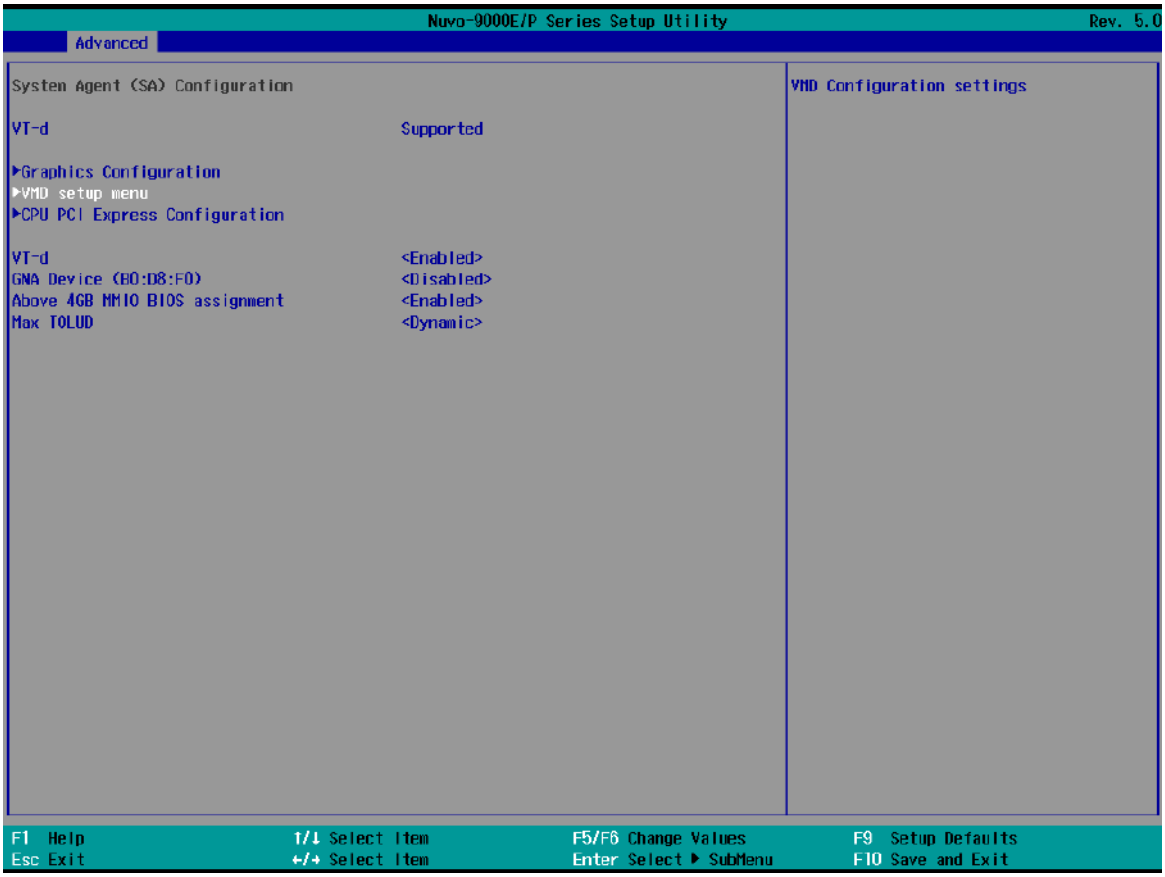

3. Select **[Enable VMD controller]** and press ENTER, highlight **[Enabled]** and press ENTER.

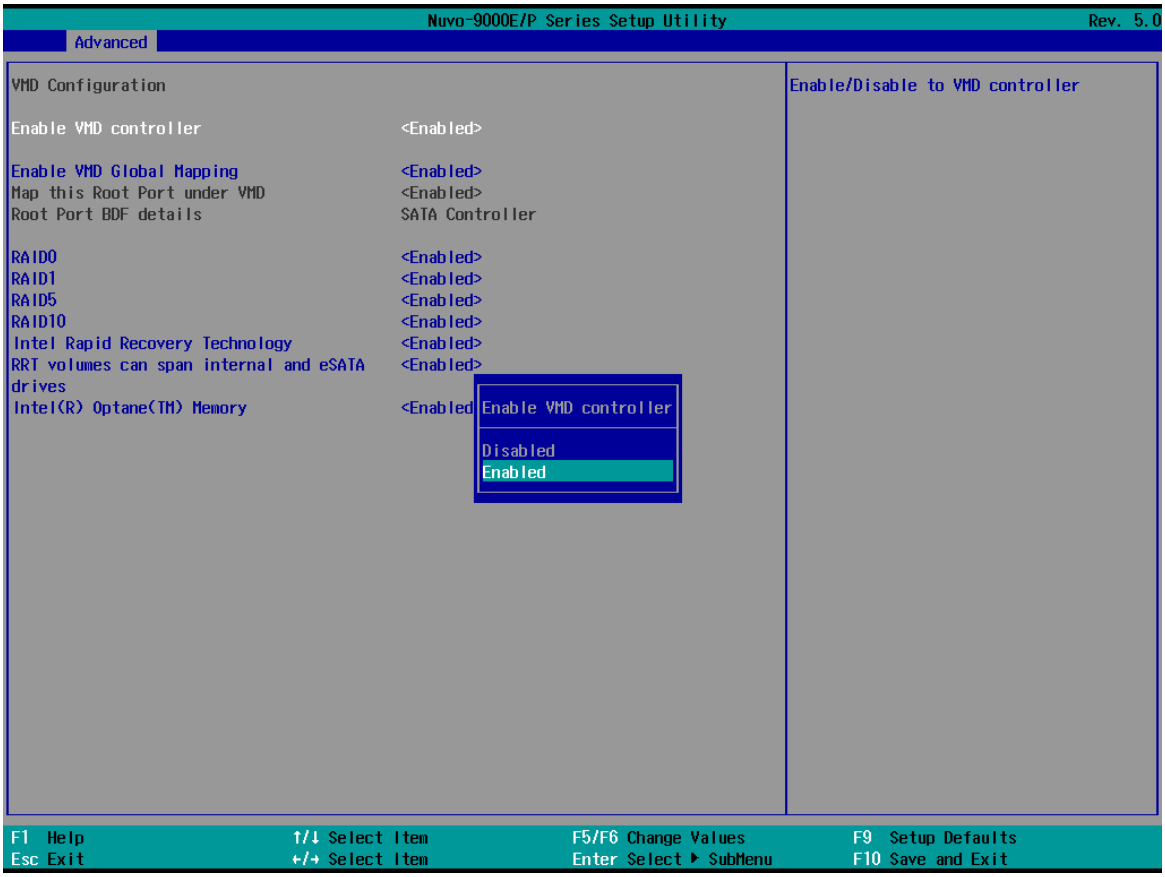

4. Press F10 to “Exit Saving Changes” and reboot the system.

5. When the system reboots, press **[F3]** to enter the Device Manager configuration utility**.**

4.3.2 RAID Volume Setup

1. Once you've press F3 upon system boot up and you are in the Device Manager configuration utility, select **[Intel® Rapid Storage Technology]** and press ENTER.

2. The following screen shows Non-RAID physical disks and the option "**Create RAID Volume**". Highlight "**Create RAID Volume**" and press ENTER to begin creating your RAID volume.

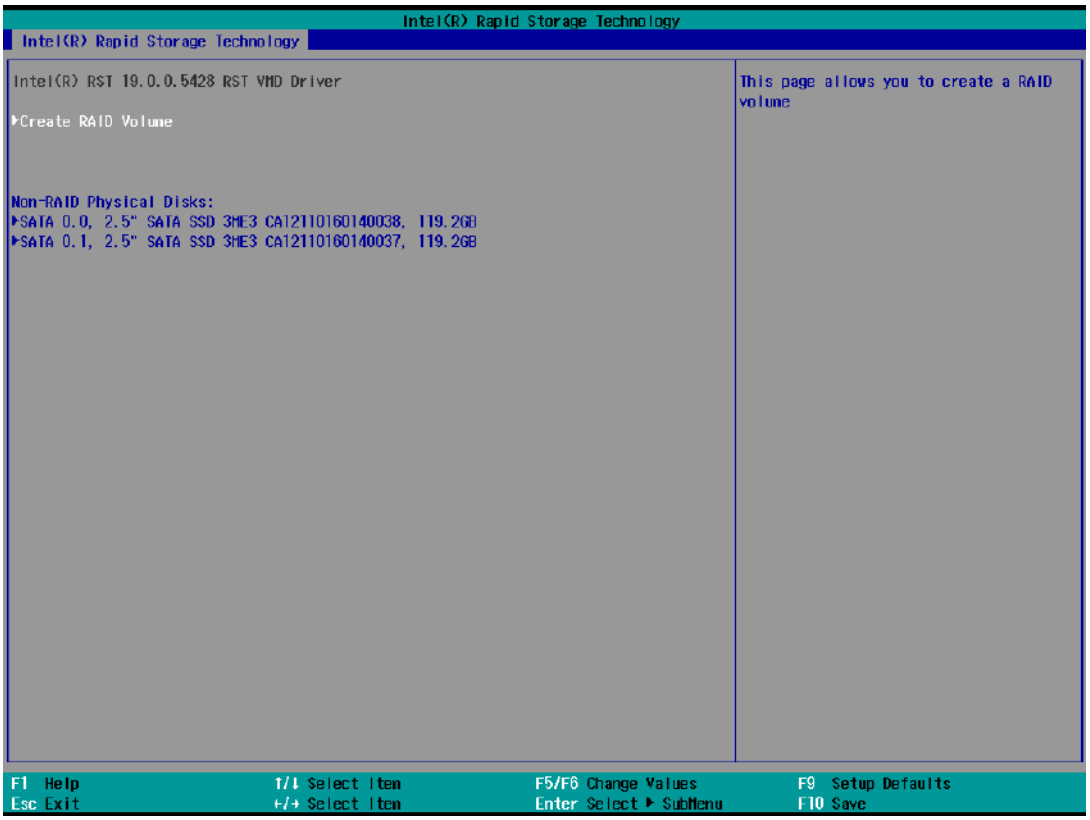

3. The Name option allows you to name your RAID volume. Press ENTER when ready to go to the next option.

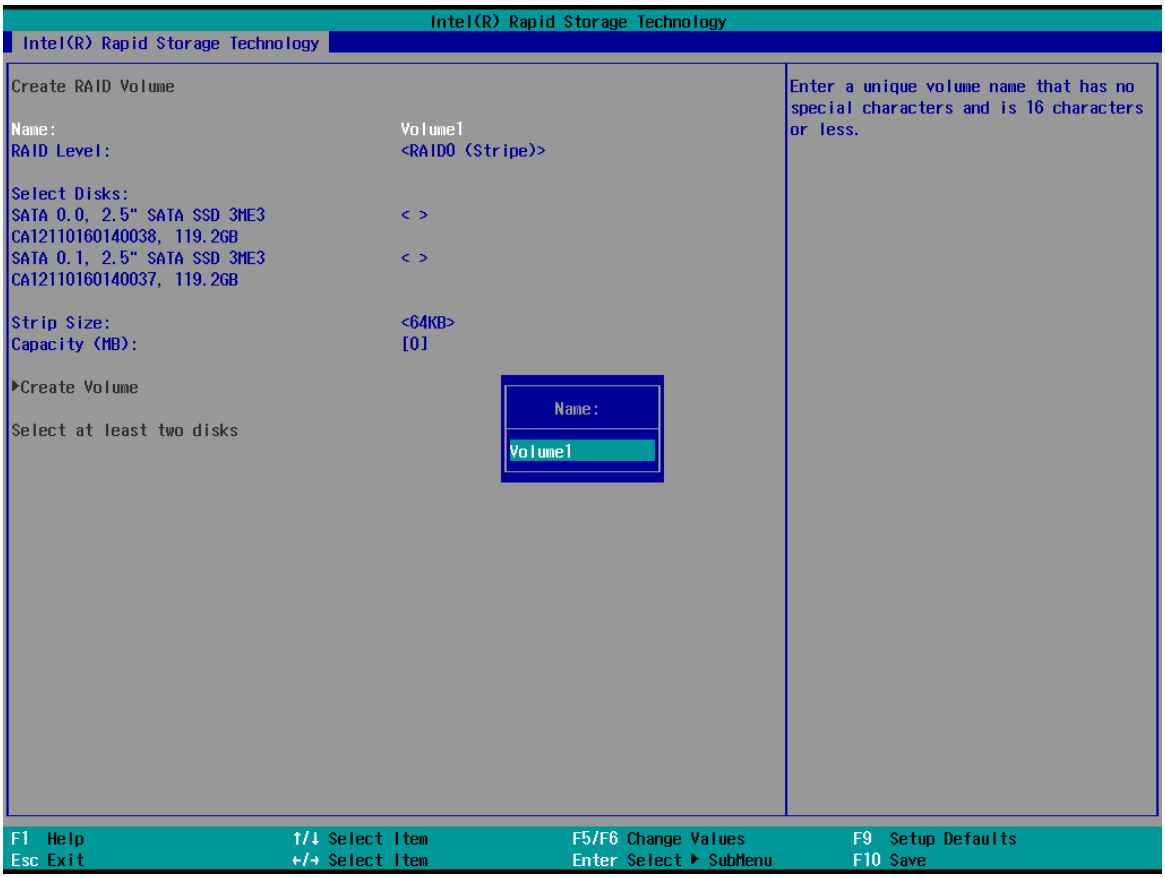

4. The RAID Level option allows you to select RAID-0 (stripping) or RAID-1 (mirror) for your RAID volume. Press ENTER when ready.

5. The Select Disks option allows you to select disk drives for your RAID volume. Highlight a drive and press ENTER, use up/ down arrow keys to highlight “x” and press ENTER to confirm the selection. A minimum of two disk drives must be selected for RAID-0 or RAID-1 configuration. Press ENTER when ready.

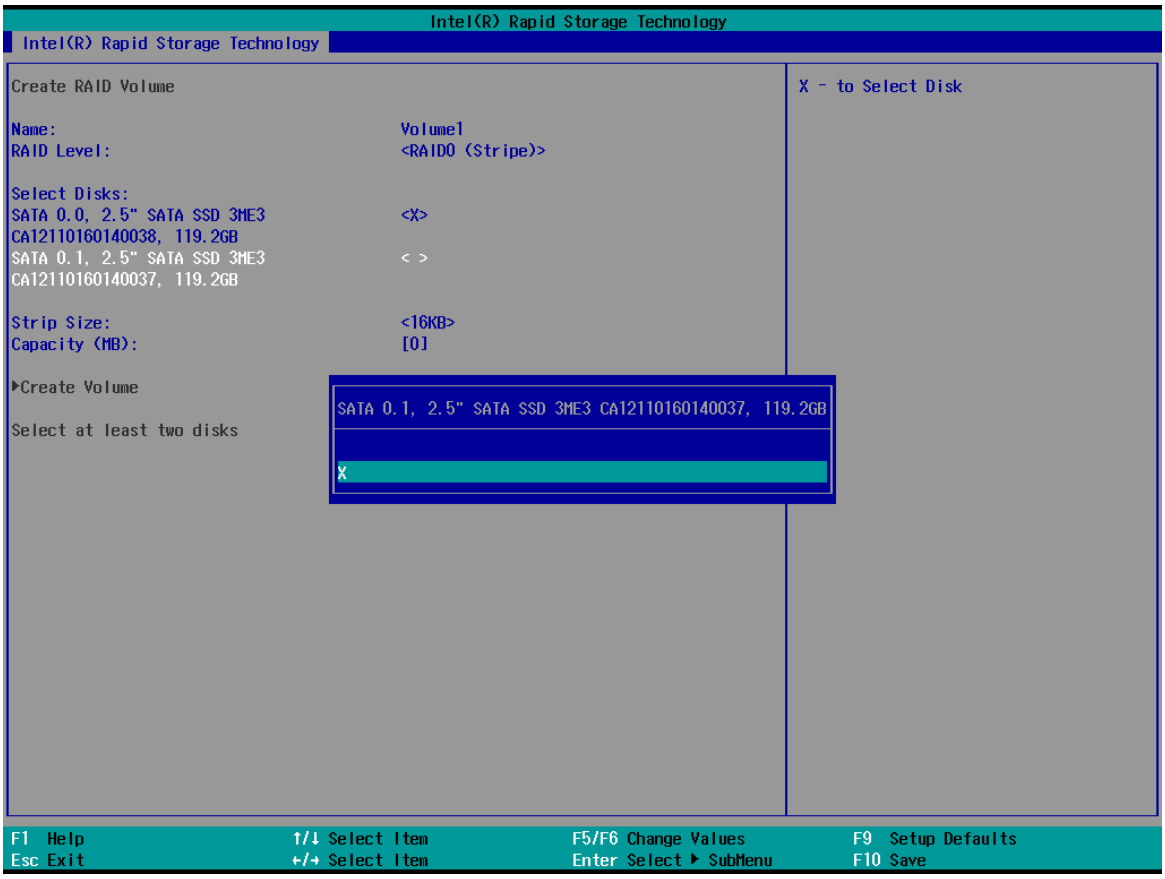

6. The Stripe Size option allows you to configure the stripe size of your RAID volume. Available stripe sizes are 4KB, 8KB, 16KB, 32KB, 64KB, 128KB, use the up and down arrow keys to highlight and press ENTER to confirm the stripe size selection.

   *RAID1 (Mirror) does not offer Stripe Size options.

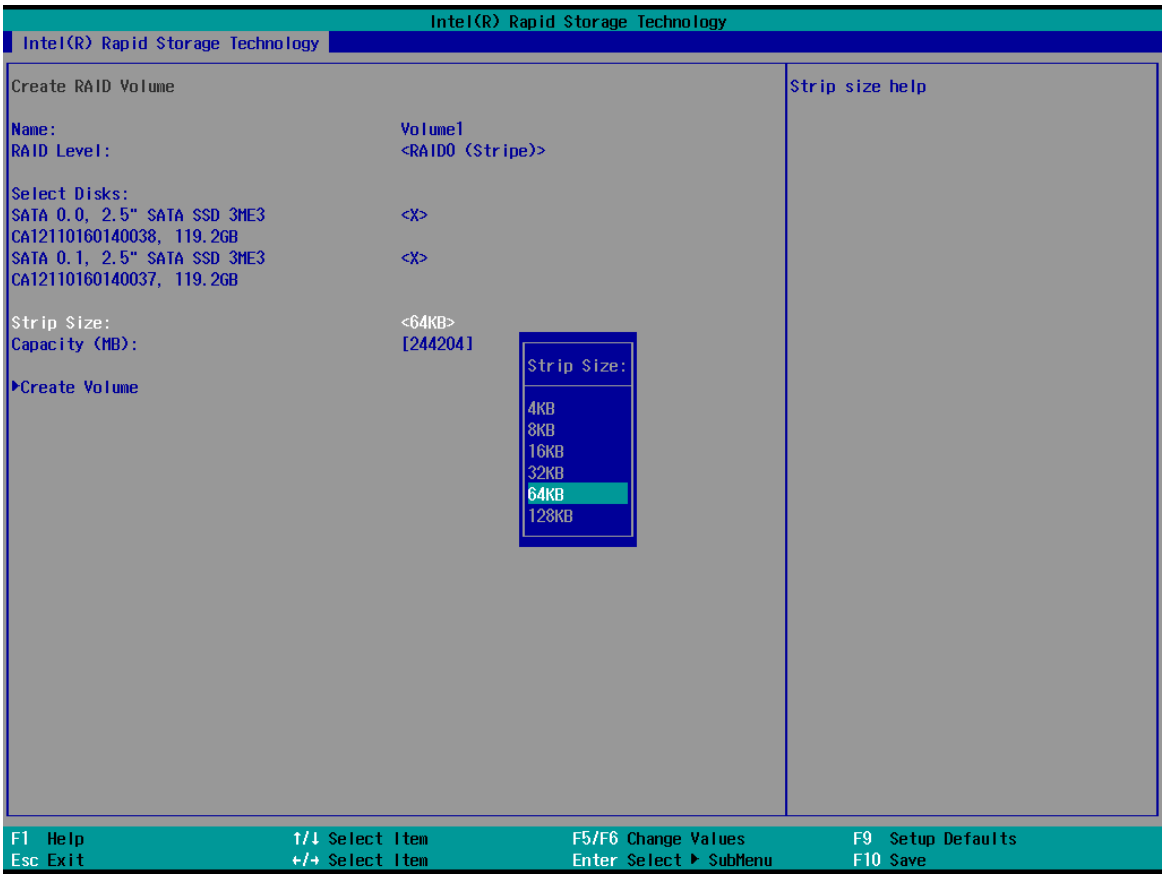

7. The Capacity (MB) option allows you to configure the storage capacity of your RAID volume. By default, the full storage capacity will be applied. Once you have entered a capacity, press ENTER to confirm.

8. The Create Volume option is the final step in the volume creation process. Highlight "**Create Volume**" and press ENTER to begin creating your RAID volume base on the settings you just configured.

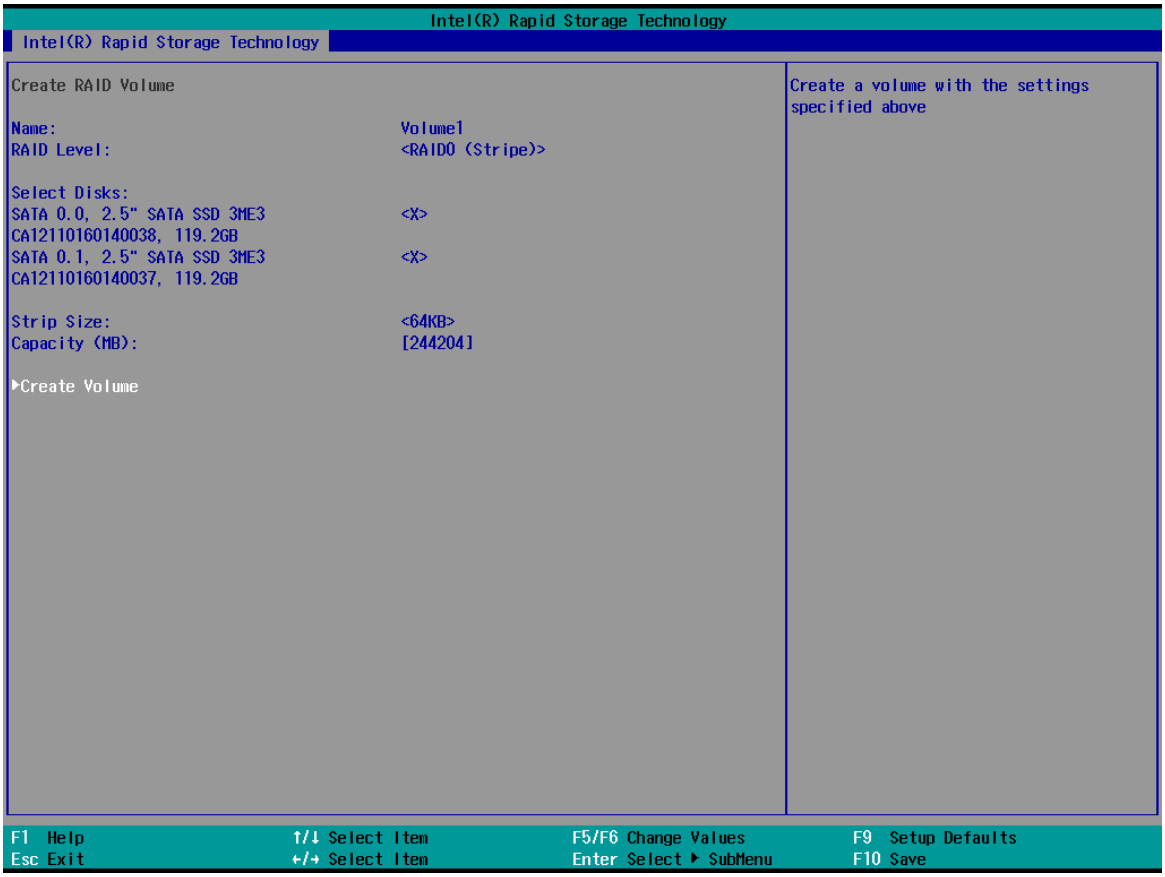

9. A summary and status of the RAID volume will be shown when the RAID volume is successfully created.

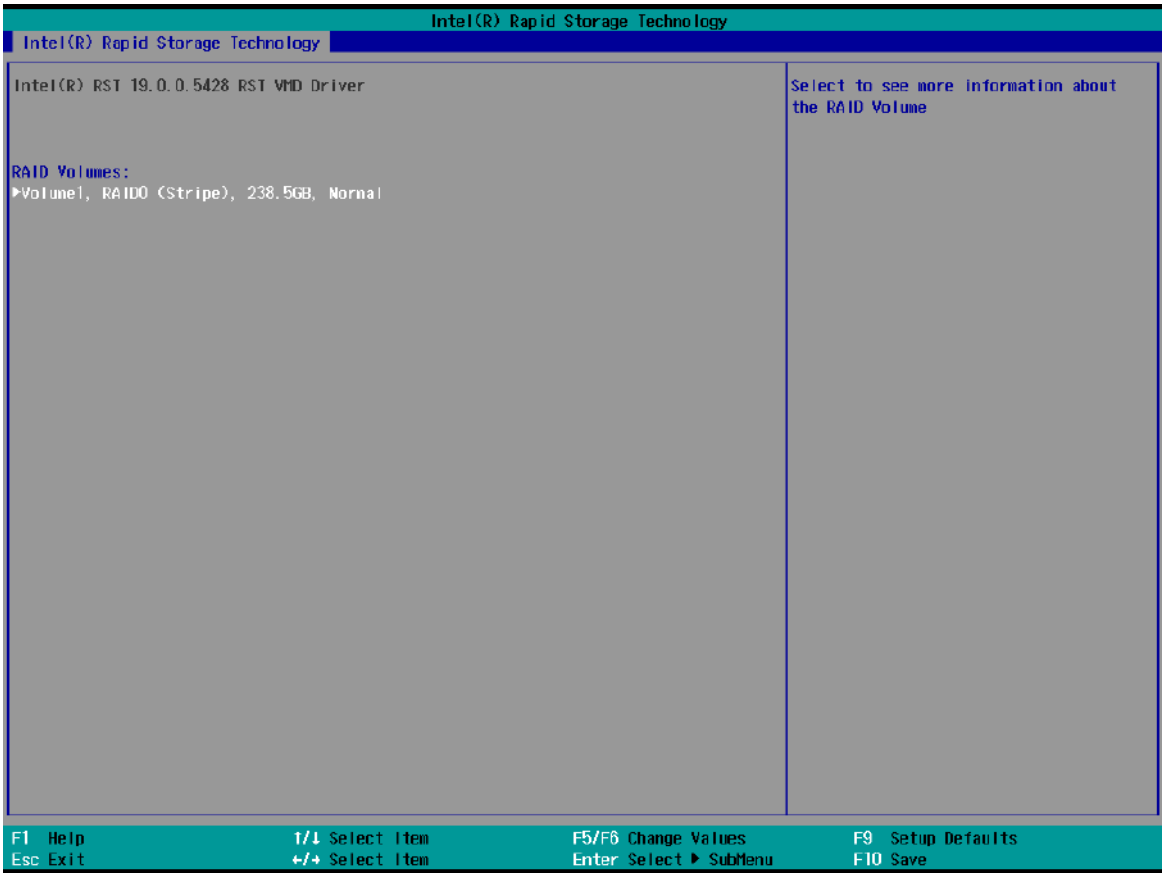

10. Press F10 to save and Esc to exit the Intel® Rapid Storage Technology configuration page.

NOTE

The above process was to create a RAID-0 volume. If you wish to create a RAID-1 volume, please perform RAID Volume Setup process and select RAID-1 (Mirror) during step 4.

4.3.3 Loading RAID Driver for Windows Installation

To install Windows on the RAID volume you created, please refer to the following procedure:

1. Please prepare a bootable Windows installation USB drive with the zip file "f6vmdflpy-x64". Download and unzip the driver files, copy the driver files onto the Windows installation USB drive.

2. Connect the Windows installation USB drive into one of the USB connections on Nuvo-9000.

3. Windows installation process should automatically begin (if not, please make sure the boot device in BIOS is set properly).

4. Select the "Load Driver" icon.

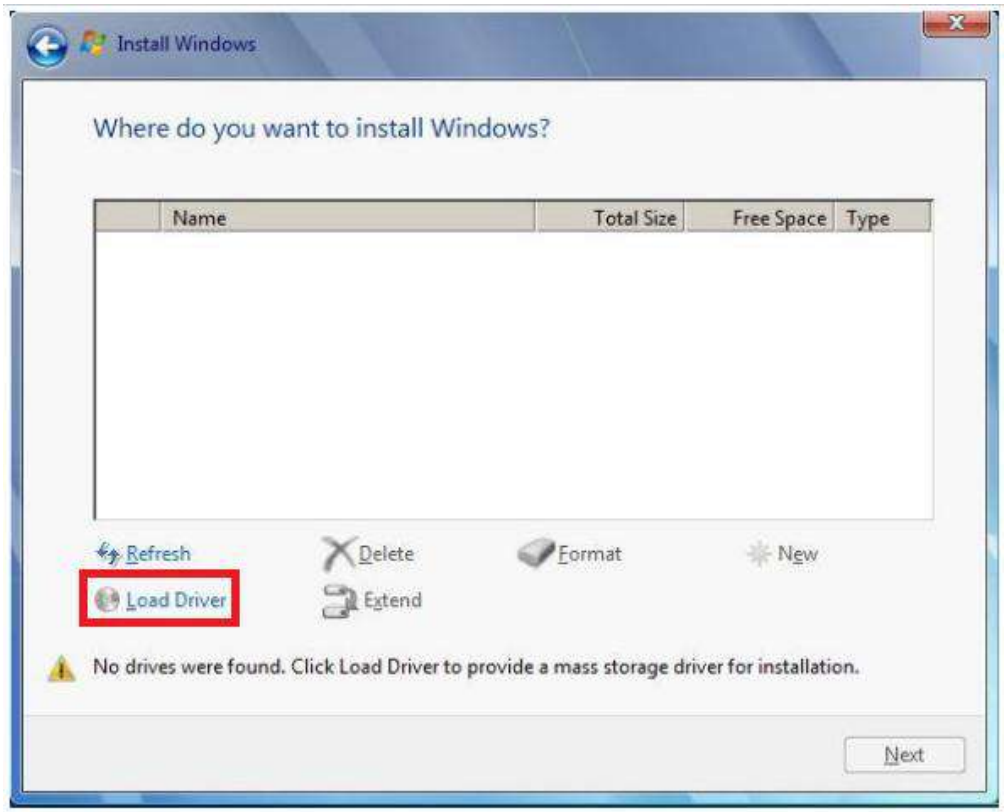

5. In the pop-up Window, select “Browse”, go to the directory where you saved the unzipped drivers “f6vmdflpy-x64”, and click OK.

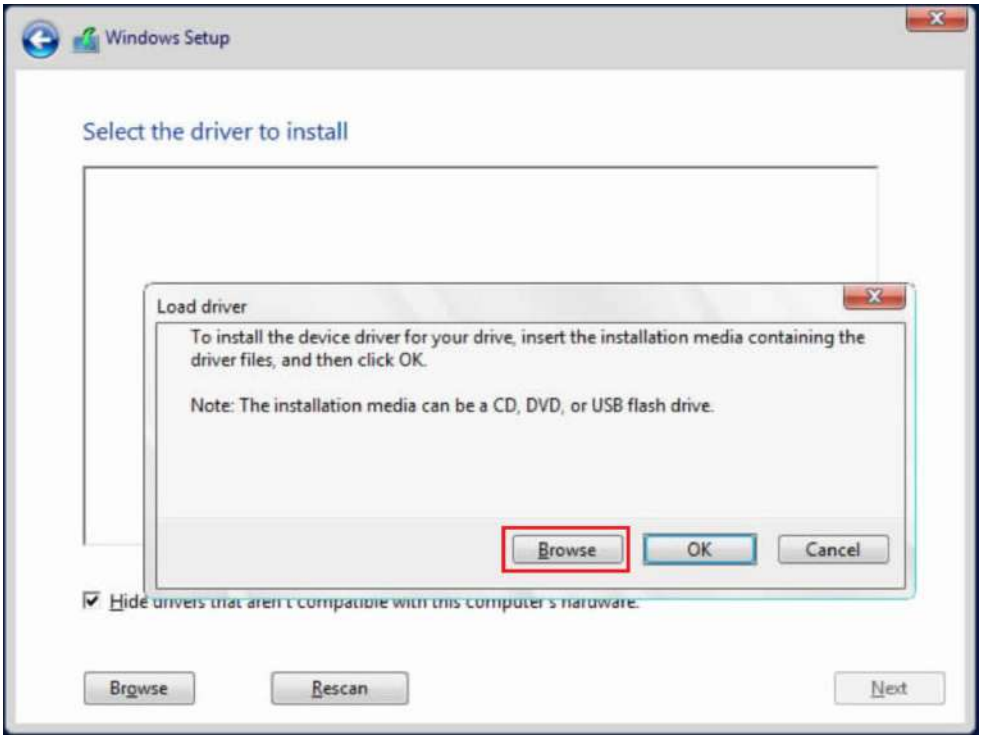

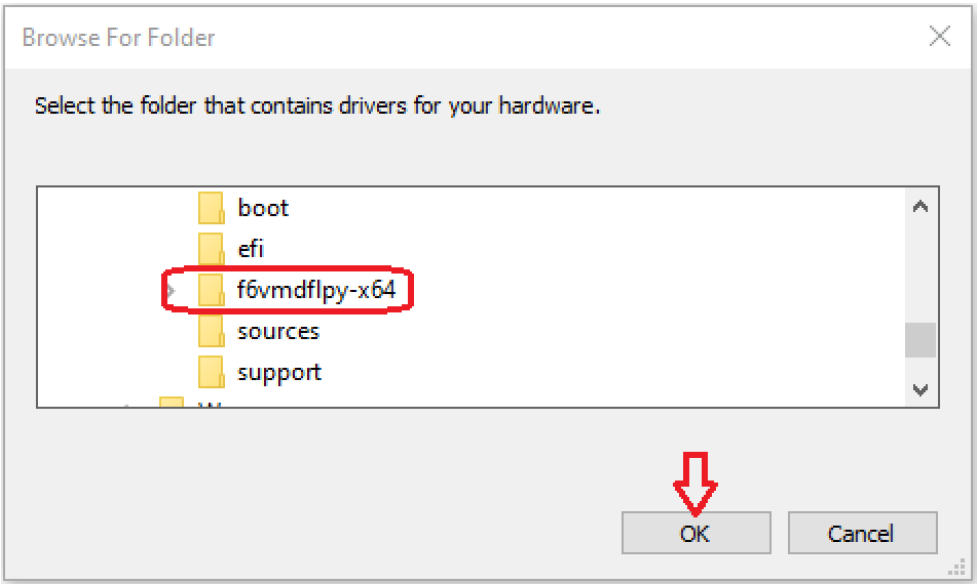

6. Select the driver “Intel RST VMD Controller 467F” and click on Next.

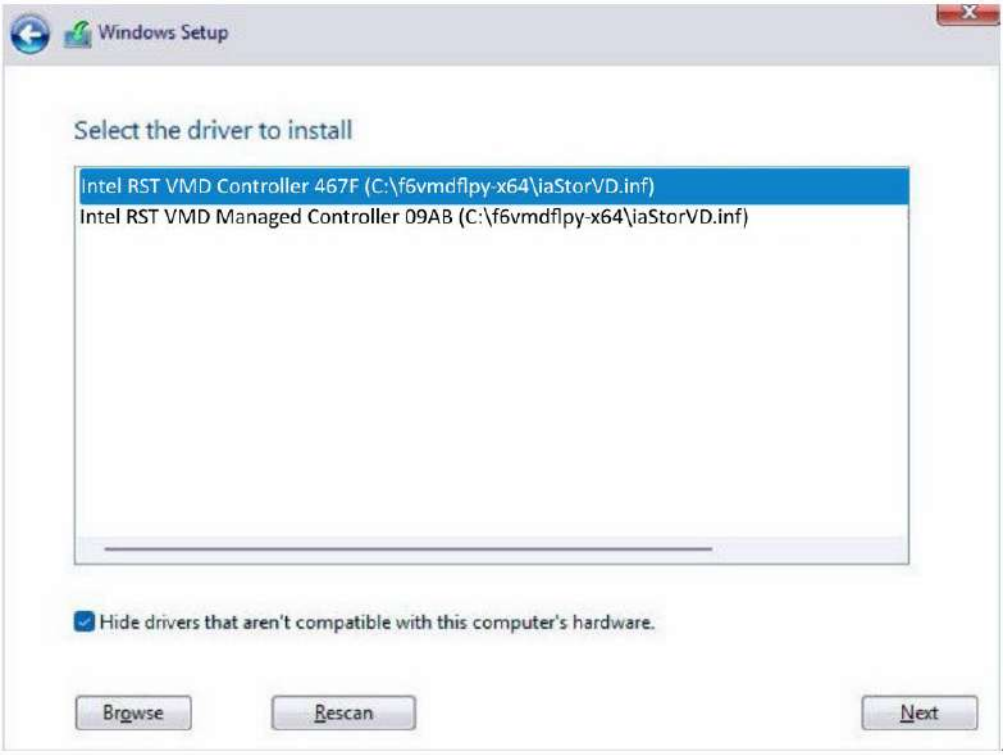

7. The previous created RAID volume shall appear as unallocated space.

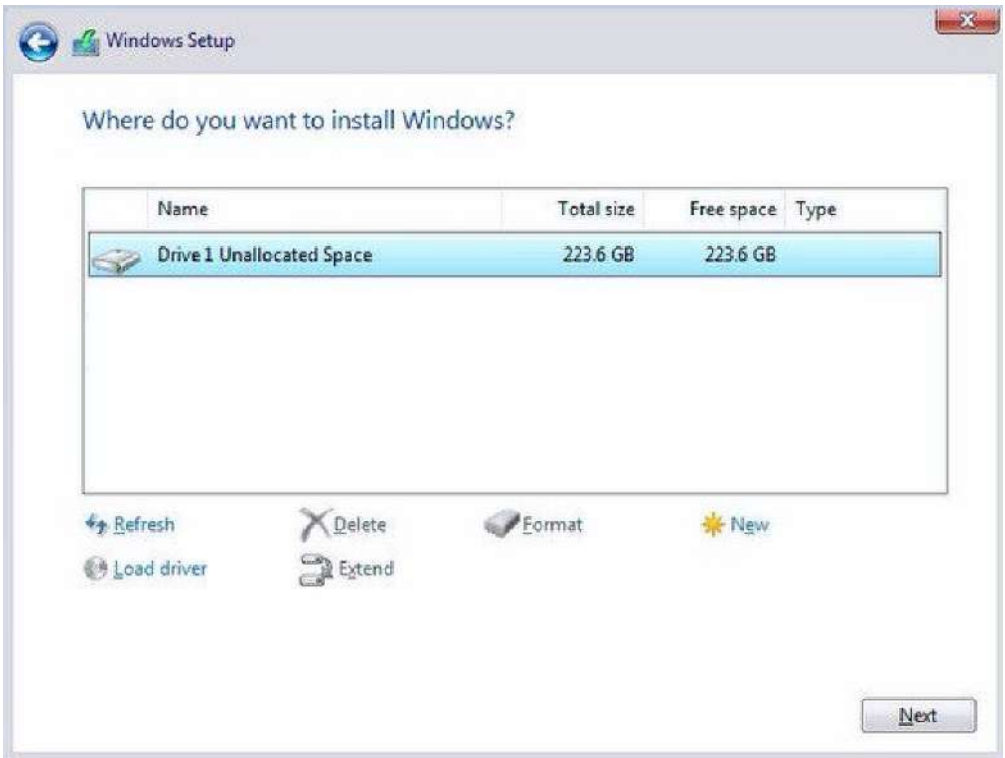

8. From here, just follow the standard Windows installation procedures.

5 OS Support and Driver Installation

5.1 Operating System Compatibility

The system supports most operating system developed for Intel® x86 architecture. The following list contains the operating systems which have been tested by Neousys Technology.

- Microsoft Windows 10 LTSC 2021 (x64)
- Microsoft Windows 11 LTSC
- Ubuntu 22.04.2 LTS, 24.04 LTS or other distribution with kernel version ≥ 5.19 */**

NOTE

** For Linux system, user may need to manually compile and install the driver for Intel graphics or I226-IT GbE controller if the driver is not embedded in kernel. You can visit Intel website for further information.*

*** For distributions, graphics driver and RAID function may not be completely implemented in its kernel. You may encounter restrictions when using these features, such as triple independent display and RAID. For optimum operation, it is the users' responsibility to manually check for new drivers and upgrades!*

Neousys may remove or update operating system compatibility without prior notice. Please contact us if your operating system of choice is not on the list.

5.2 System Driver Installation

The system drivers are available online, please click on this link to download the drivers.

5.3 Driver Installation for Watchdog Timer Control

Neousys provides a driver package which contain function APIs for Watchdog Timer control function. You should install the driver package (WDT_DIO_Setup.exe) in prior to use these functions. Please note that you must install WDT_DIO_Setup_v2.4.1.0 or later versions.

Please refer to this link to download WDT_DIO.

Appendix A Using WDT & DIO

The watchdog timer (WDT) function to ensure reliable system operation. The WDT is a hardware mechanism to reset the system if the watchdog timer is expired. Users can start the WDT and keeping resetting the timer to make sure the system or program is running. Otherwise, the system shall be reset.

In this section, we'll illustrate how to use the function library provided by Neousys to program the WDT functions. Currently, WDT driver library supports Windows 10 x64 and WOW64 platform. For other OS support, please contact Neousys Technology for further information.

Installing WDT_DIO Library

The WDT_DIO function library is delivered in the form of a setup package named **WDT_DIO_Setup.exe**. In prior to program WDT, you should execute the setup program and install the WDT library. Please use the following WDT_DIO_Setup packages according to your operating systems and application.

- For Windows 10 64-bit OS with 64-bit application (x64 mode), please install WDT_DIO_Setup_v2.4.1.0(x64).exe or later versions.

WDT and DIO Library Installation

To setup WDT & DIO Library, please follow instructions below.

1. Execute **WDT_DIO_Setup.2.4.1.0.exe** (or later) and the following dialog appears.

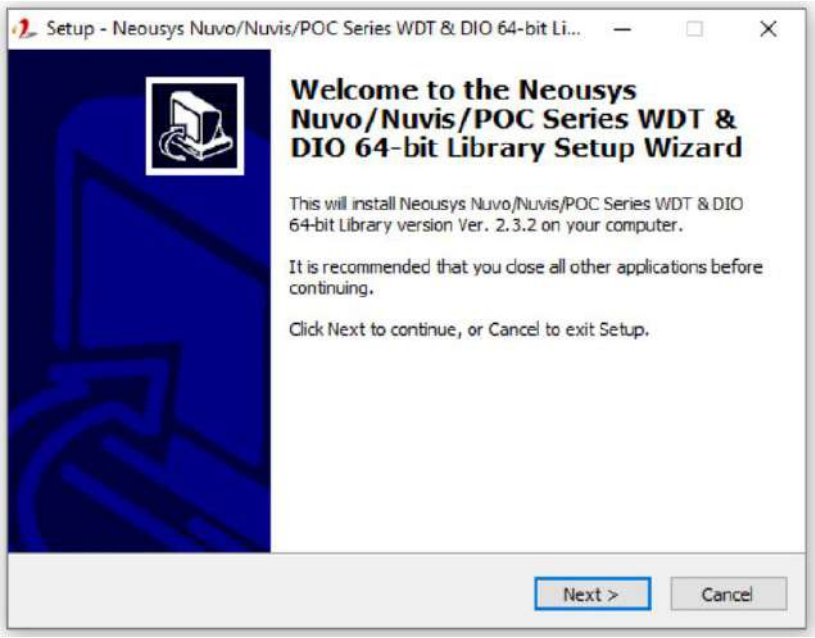

2. Click “Next >” and specify the directory of installing related files. The default directory is *C:\Neousys\WDT_DIO*.

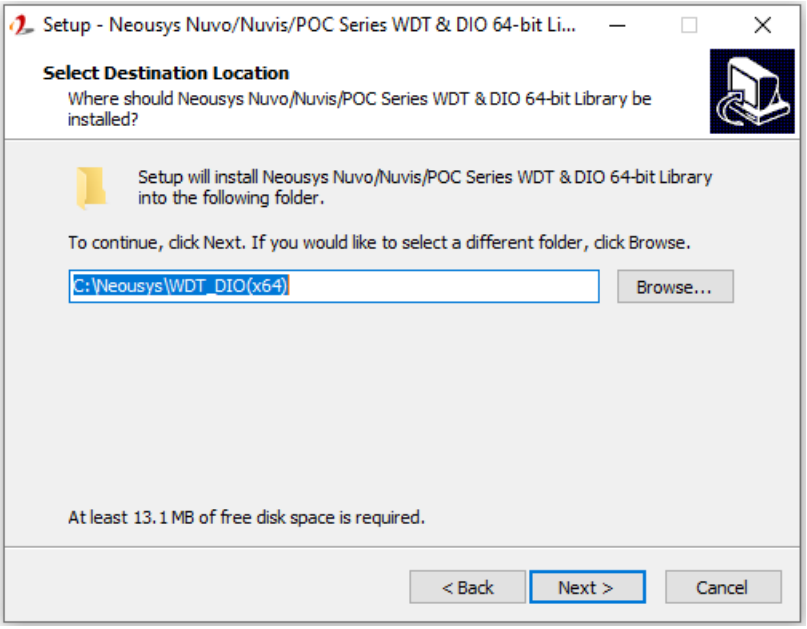

3. Once the installation has finished, a dialog will appear to prompt you to reboot the system. The WDT & DIO library will take effect after the system has rebooted.

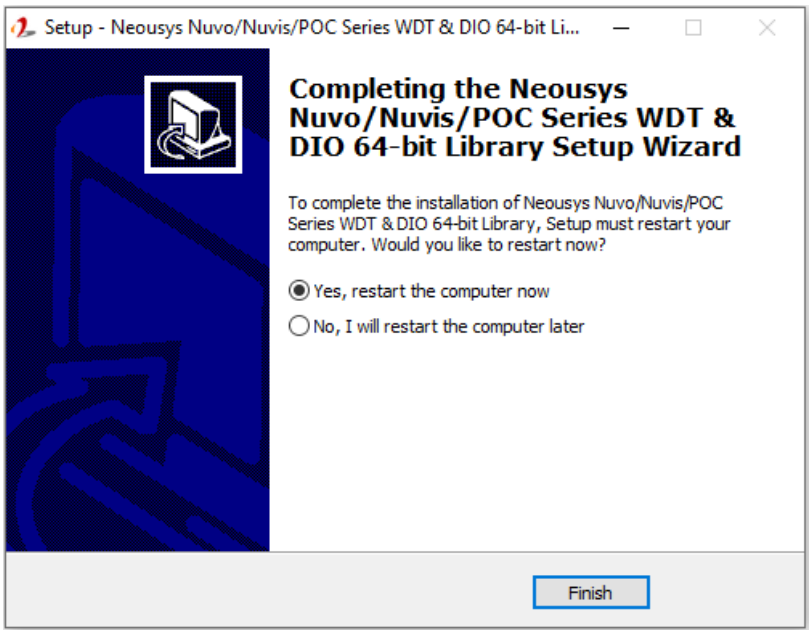

4. When programming your WDT or DIO program, the related files are located in

Header File:	\Include
Library File:	\Lib
Function Reference:	\Manual
Sample Code:	\Sample\WDT_Demo (Demo for Watchdog Timer)

WDT Functions

InitWDT

Syntax	BOOL InitWDT(void);
Description:	Initialize the WDT function. You should always invoke InitWDT() before set or start watchdog timer.
Parameter	None
Return Value	**TRUE:** Successfully initialized **FALSE:** Failed to initialize
Usage	BOOL bRet = InitWDT()

SetWDT

Syntax	BOOL SetWDT(WORD tick, BYTE unit);
Description	Set timeout value and unit for watchdog timer. When InitWDT() is invoked, a default timeout value of 255 seconds is assigned.
Parameter	*tick* WORD value (1 ~ 65535) to indicate timeout ticks. *unit* BYTE value (0 or 1) to indicate unit of timeout ticks. 0 : unit is minute 1: unit is second
Return Value	If value of unit is correct (0 or 1), this function returns TRUE, otherwise FALSE.

Usage	WORD tick=255;
	BYTE unit=1; //unit is second.
	BOOL bRet = SetWDT(tick, unit); //timeout value is 255 seconds

StartWDT

Syntax	BOOL StartWDT(void);
Description	Starts WDT countdown. Once started, the WDT LED indicator will begin blinking. If ResetWDT() or StopWDT is not invoked before WDT countdowns to 0, the WDT expires and the system resets.
Parameter	None
Return Value	If the timeout value is given in correct format (WDT started), this function returns TRUE, otherwise FALSE
Usage	BOOL bRet = StartWDT()

ResetWDT

Syntax	BOOL ResetWDT(void);
Description	Reset the timeout value to the value given by SetWDT().If ResetWDT() or StopWDT is not invoked before WDT countdowns to 0, the WDT expires and the system resets.
Parameter	None
Return Value	Always returns TRUE
Usage	BOOL bRet = ResetWDT()

StopWDT

Syntax	BOOL StopWDT(void);
Description	Stops the countdown of WDT. When WDT has stopped, the WDT LED indicator stops blinking.
Parameter	None
Return Value	Always returns TRUE
Usage	BOOL bRet = StopWDT()

Appendix B PoE On/ Off Control

Nuvo-9000 series offer 802.3at PoE+ ports and users are allowed to manually turn on or off the power supply of each PoE port. This can be useful in power device (PD) fault-recovery or power reset. The APIs are part of Neousys WDT_DIO driver package. Please follow the instructions in Appendix A Watchdog Timer & Isolated DIO for installation before programming PoE on/off control function.

> **NOTE**
>
> Nuvo-9000E/P series will be shown in illustrations for demonstration purposes.

GetStatusPoEPort

Syntax	BYTE GetStatusPoEPort (Byte port);
Description	Get current on/off status of designated PoE port.
Parameter	*port* BYTE value specifies the index of PoE port. Please refer to the following illustration, *port* should be a value of 1 ~ 4
Return Value	BYTE value indicating PoE on/off status 0 if port is disabled (off) 1 if port is enabled (on)
Usage	BYTE bEnabled = GetStatusPoEPort (1); //Get on/off status of PoE Port#1

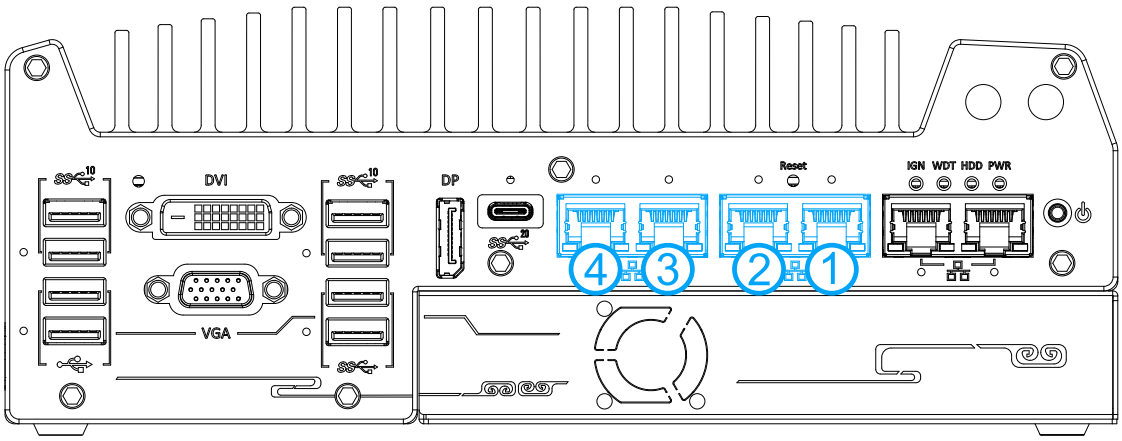

PoE+ ports on the front panel

EnablePoEPort

Syntax	BOOL EnablePoEPort (BYTE port);
Description	Turn on PoE power of designated PoE port.
Parameter	*port* BYTE value specifies the index of PoE port. Please refer to the following illustration, *port* should be a value of 1 ~ 4
Return Value	**TRUE** if enabled success **FALSE** if fail to enable.
Usage	BOOL bRet = EnablePoEPort (1); //Turn on PoE Port#1

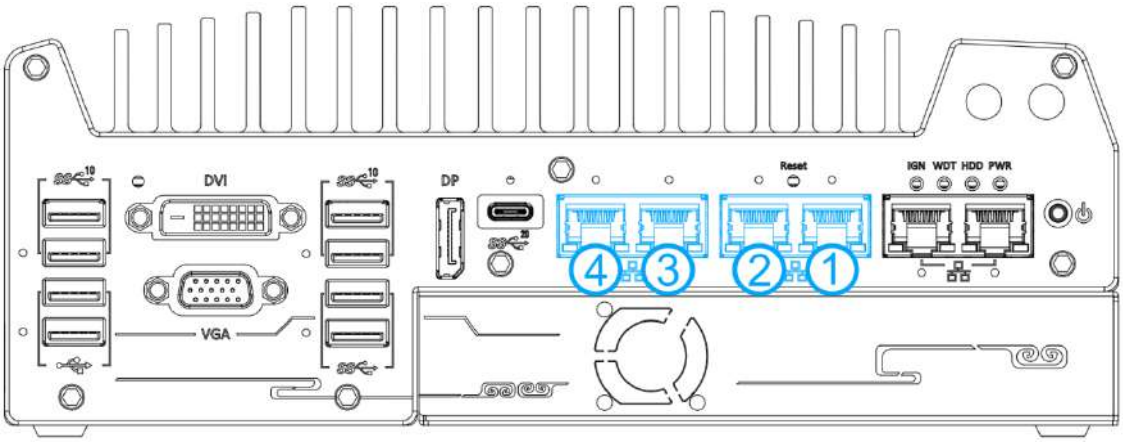

PoE+ ports on the front panel

DisablePoEPort

Syntax	BOOL DisablePoEPort (BYTE port);
Description	Turn off PoE power of designated PoE port
Parameter	*port* BYTE value specifies the index of PoE port. Please refer to the following illustration, *port* should be a value of 1 ~ 4
Return Value	**TRUE** if disabled success **FALSE** if fail to disable
Usage	BOOL bRet = DisablePoEPort (1); //Turn off PoE Port#1

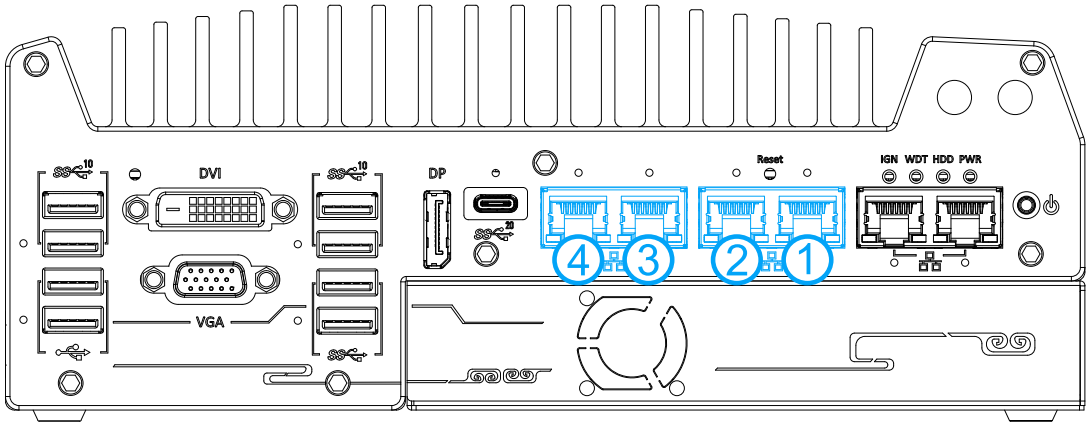

PoE+ ports on the front panel